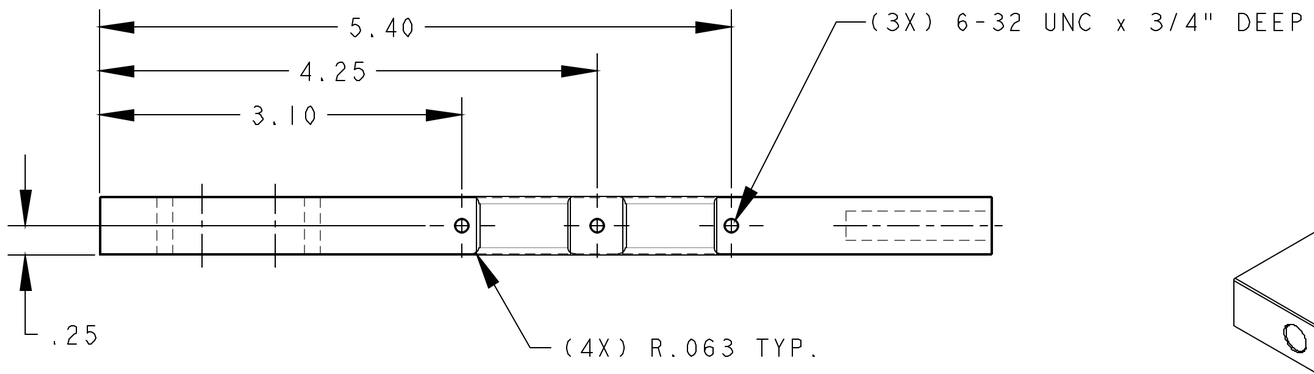

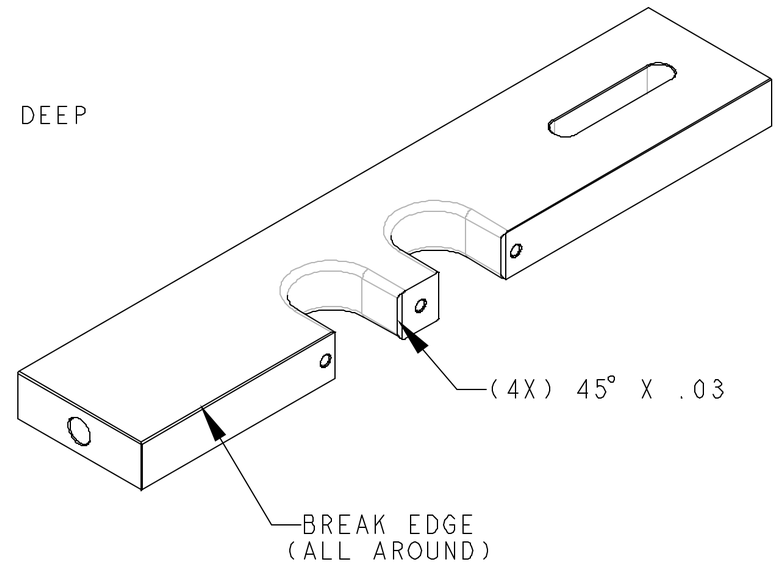

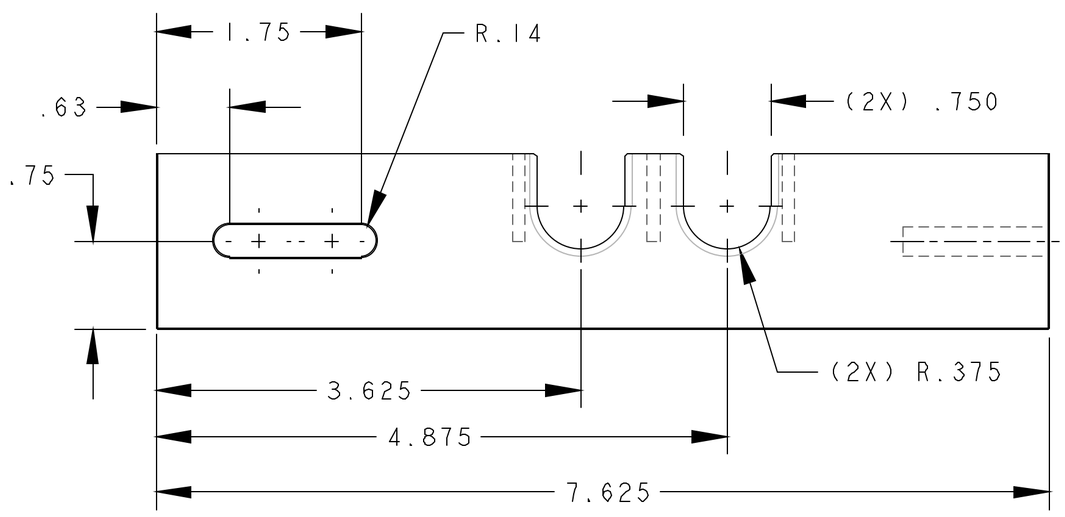

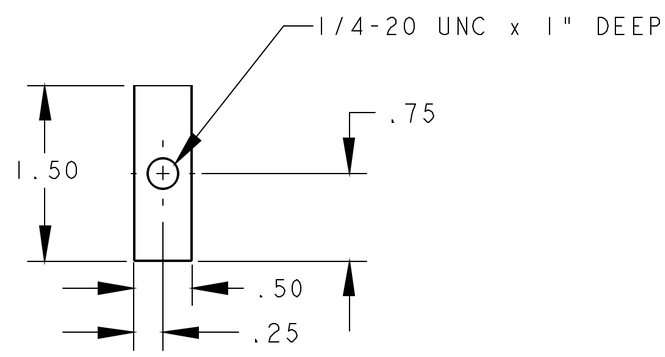

A	AD			1/9/02	INITIAL RELEASE
REV	DWG	CHK	ZONE	DATE	CHANGES

UNLESS OTHERWISE SPECIFIED
PROJECTION:

TOLERANCES		
	X.X ± 0.1	FRAC. ± 1/64
	X.XX ± 0.03	Angles ± 1.0°
	X.XXX ± 0.010	FINISH 125

DO NOT SCALE PRINT
THREADS ARE CLASS 2
CHAMFER ENDS OF ALL SCREW TREADS 30°
CUT ROUND, 1.5 THREAD RELIEF ON MACHINED THREADS
BREAK EDGES .016 MAX. ON MACHINED WORK
REMOVE BURRS, WELD SPLATTER & LOOSE SCALE
IN ACCORDANCE WITH ASME Y14.5M & B46.1

-		BLACK DELRIN	-
DESCRIPTION		MATERIAL	MAT. LOCATION

SHOP ORDERS

SER NO.	-		
ACCT NO.		NO. REQD	
DATE ISSD	-		
DEL TO		DATE REQD	-
SURFACE TREATMT	-		
IDENT METHOD	TAG		
PROJECT NUMBER	N/A		
PROJECT NAME	N/A		
DWG BY	Allan DeMello	DATE	13-Dec-01
CHK BY	A. DeMello	DATE	
APR BY	A. DeMello	DATE	

ERNEST ORLANDO LAWRENCE BERKELEY NATIONAL LABORATORY
UNIVERSITY OF CALIFORNIA - BERKELEY

SNS - FES MEBT
MECHANICAL SUB-SYSTEMS
QUAD POWER CABLE BRACKET, LEFT

MICROFILMED:	DWG. TYPE	SHOWN ON	SCALE: 1/1	DO NOT SCALE PRINTS
	PART	25B603	SHEET 1 OF 1	
PATENT CLEAR:	DESIGN ACCT. NO.	CATEGORY CODE	DWG. NO.	SIZE / REV.
	-	FE3313	25B7753	A

DWG. NO. 25B7753 SIZE A REV. SH. 1

Dwg. File: 25B7753 Model File: 25B7753