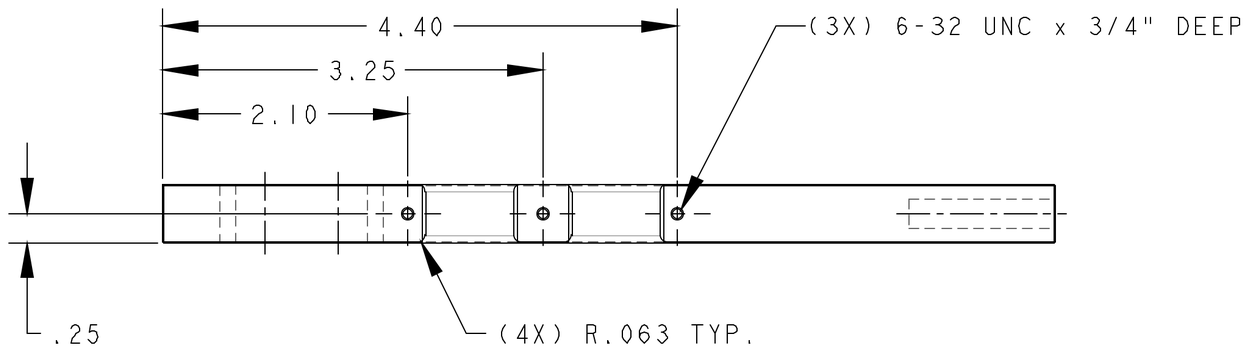

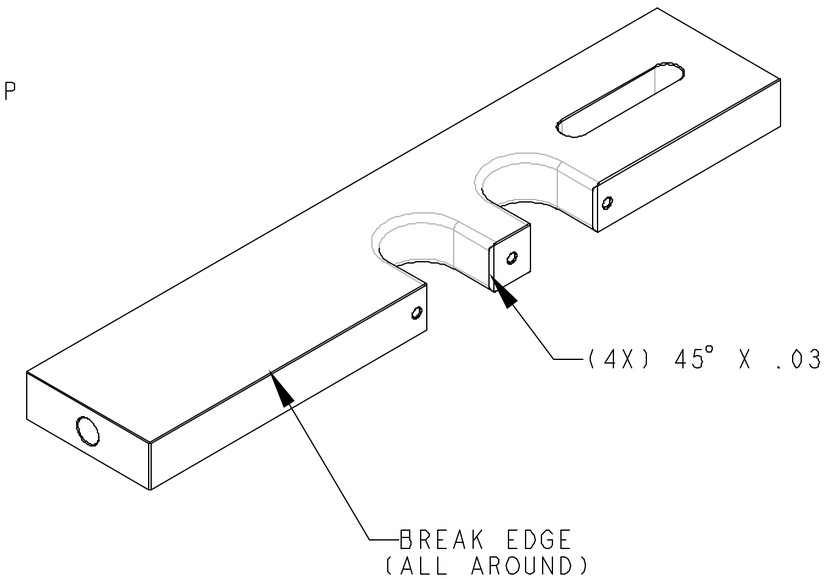

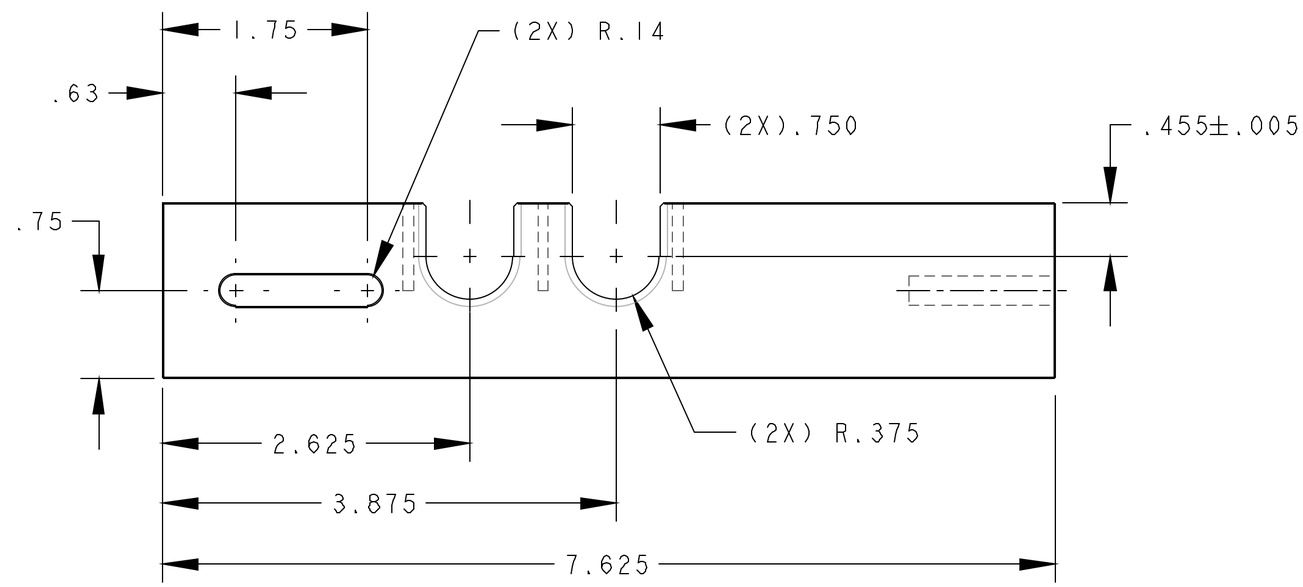

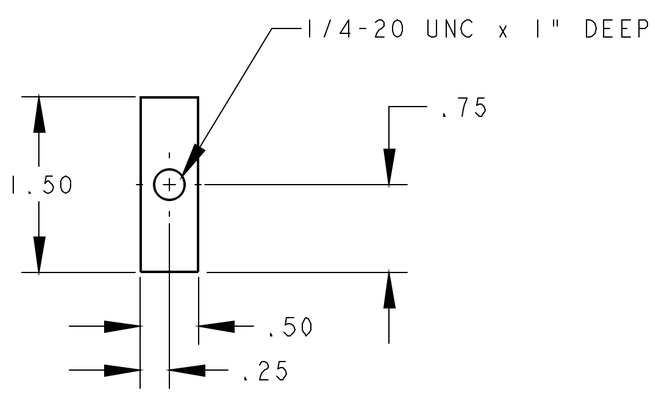

A	AD			1/9/02	INITIAL RELEASE
REV	DWG	CHK	ZONE	DATE	CHANGES

UNLESS OTHERWISE SPECIFIED
PROJECTION:

TOLERANCES	
X.X ± 0.1	FRAC. ± 1/64
X.XX ± 0.03	Angles ± 1.0°
X.XXX ± 0.010	FINISH 125

DO NOT SCALE PRINT
THREADS ARE CLASS 2
CHAMFER ENDS OF ALL SCREW TREADS 30°
CUT ROUND, 1.5 THREAD RELIEF ON MACHINED THREADS
BREAK EDGES .016 MAX. ON MACHINED WORK
REMOVE BURRS, WELD SPLATTER & LOOSE SCALE
IN ACCORDANCE WITH ASME Y14.5M & B46.1

-	BLACK DELRIN	-
DESCRIPTION	MATERIAL	MAT. LOCATION

SHOP ORDERS

ACCT NO.	NO. REQD	SER NO.	-
DEL TO		DATE ISSD	-
SURFACE TREATMT	-	DATE REQD	-
IDENT METHOD	TAG		
PROJECT NUMBER	N/A		
PROJECT NAME	N/A		
DWG BY	Allan DeMello	DATE	12-Dec-01
CHK BY	A. DeMello	DATE	
APR BY	A. DeMello	DATE	

ERNEST ORLANDO LAWRENCE BERKELEY NATIONAL LABORATORY
UNIVERSITY OF CALIFORNIA - BERKELEY

SNS - FES MEBT
MECHANICAL SUB-SYSTEMS
QUAD POWER CABLE BRACKET, RIGHT

MICROFILMED:	DWG. TYPE	SHOWN ON	SCALE: 1/1	DO NOT SCALE PRINTS
	PART	25B603	SHEET 1 OF 1	
PATENT CLEAR:	DESIGN ACCT. NO.	CATEGORY CODE	DWG. NO.	SIZE / REV.
	-	FE3313	25B7743	A

DWG. NO. 25B7743 SIZE A REV. SH. 1

Dwg. File: 25B7743 Model File: 25B7743