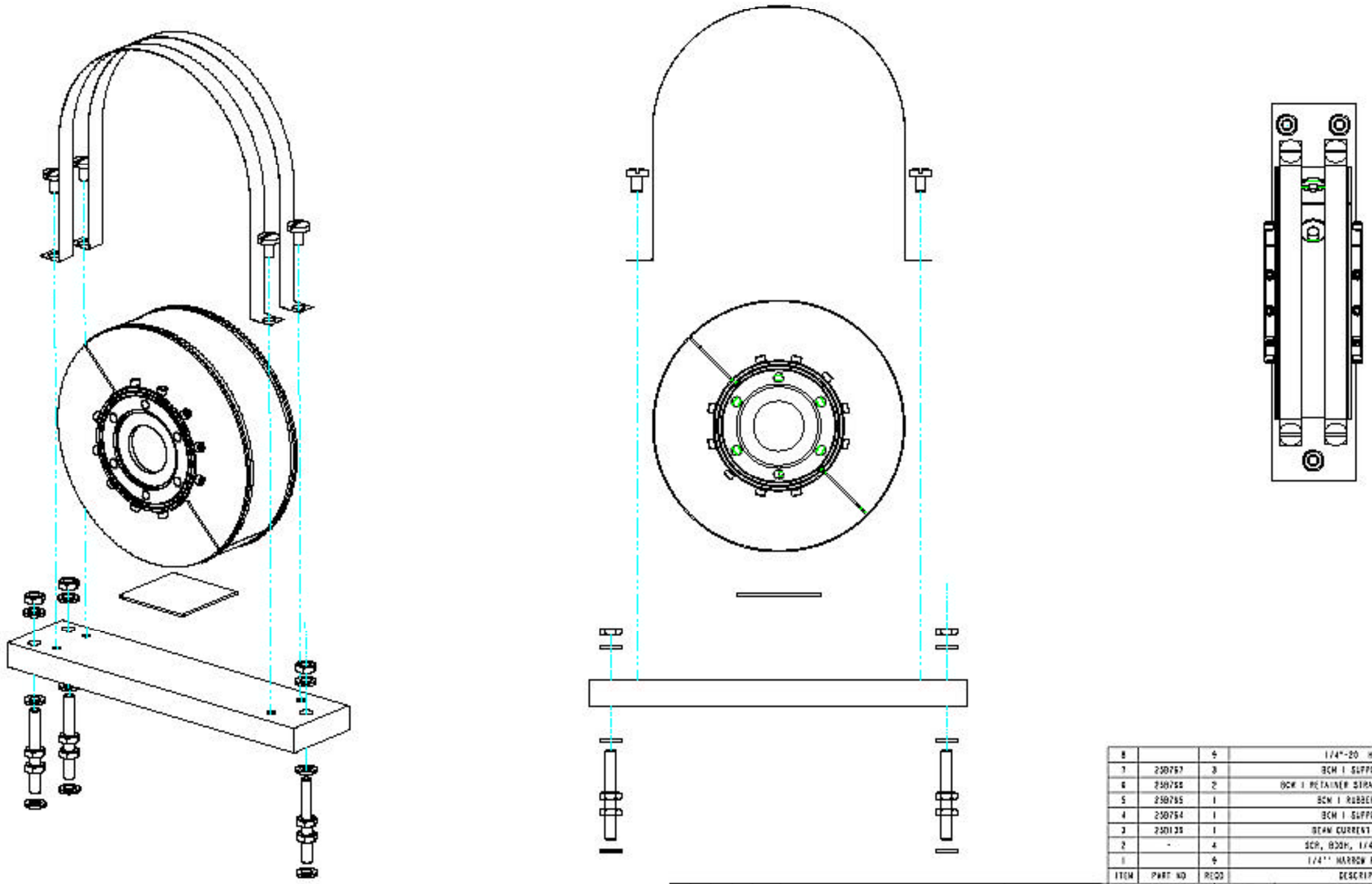

ITEM	PART NO	REQD	DESCRIPTION	MATERIAL
8		4	1/4"-20 HEX. NUT	18-8 SS
7	258767	3	BCM 1 SUPPORT STUD	STAINLESS STEEL
6	258766	2	BCM 1 RETAINER STRAP, 0.010" THICK	STAINLESS STEEL
5	258765	1	BCM 1 RUBBER CUSHION	1/16" RUBBER SHEET
4	258764	1	BCM 1 SUPPORT BASE	6061 ALUMINUM
3	258135	1	BEAM CURRENT MONITOR 1	-
2	-	4	SCR, BOSH, 1/4-20 X 3/8 L	SS 18-8
1		4	1/4" NARROW FLAT WASHER	STAINLESS STEEL

REV	DWG	CHK	ZONE	DATE	CHANGES

UNLESS OTHERWISE SPECIFIED
PROJECTION:
DO NOT SCALE PRINT

SHOP ORDERS

ERNEST ORLANDO LAWRENCE BERKELEY NATIONAL LABORATORY
UNIVERSITY OF CALIFORNIA - BERKELEY

SNS - FES NEBT
GENERAL NT
BCM MOUNT ASSEMBLY

ASSEM 258603 SCALE 3/4 SHEET 1 OF 1

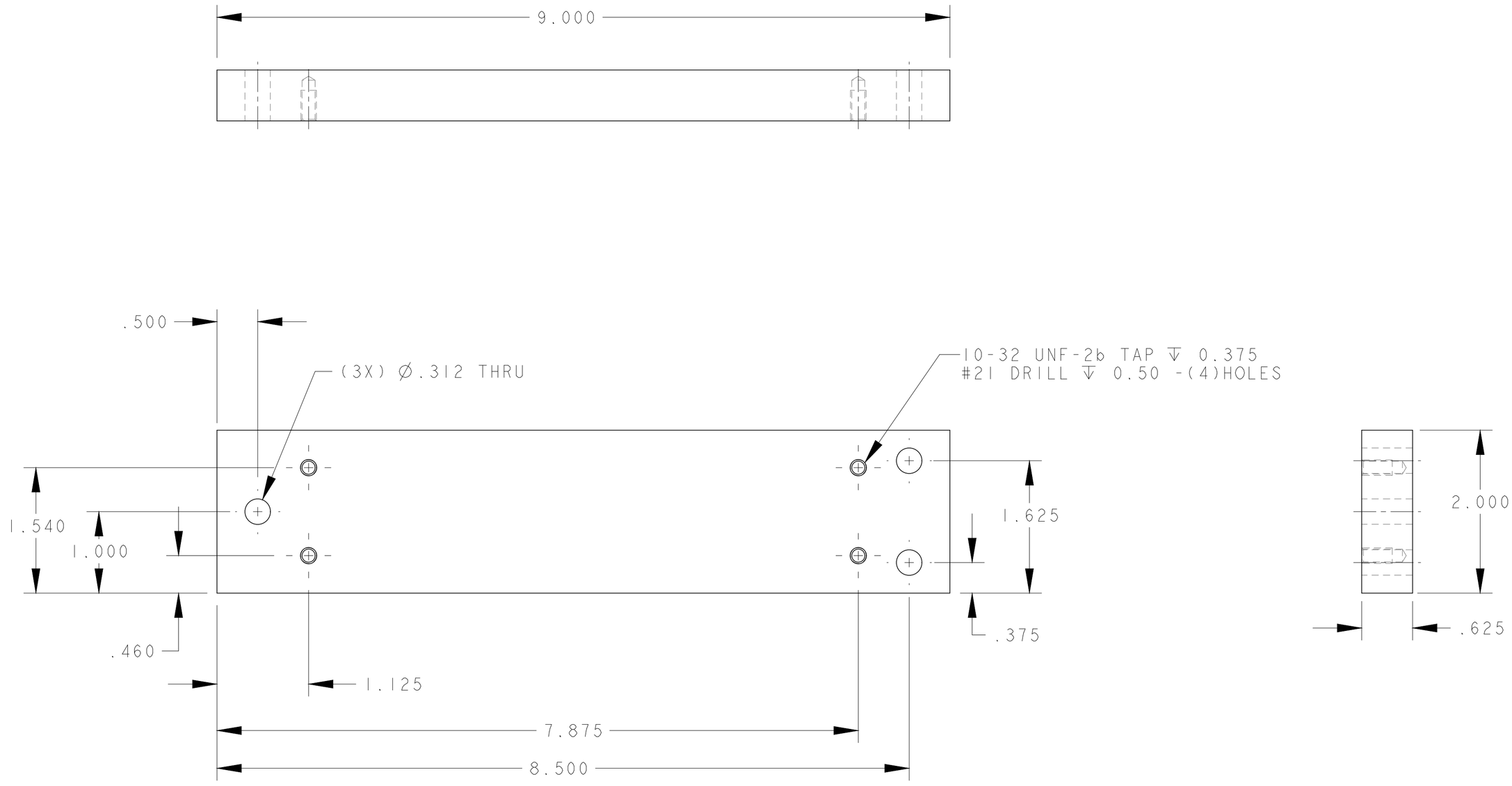

DESCRIPTION	MATERIAL	MAT. LOCATION
-	6061 ALUMINUM	-

REV	DWG	CHK	ZONE	DATE	CHANGES
A	AD			3/5/02	INITIAL RELEASE

UNLESS OTHERWISE SPECIFIED
PROJECTION:

TOLERANCES		
	X.X ± 0.1	FRAC. ± 1/64
	X.XX ± 0.03	Angles ± 1.0°
	X.XXX ± 0.010	FINISH 125

DO NOT SCALE PRINT
THREADS ARE CLASS 2
CHAMFER ENDS OF ALL SCREW TREADS 30°
CUT ROUND, 1.5 THREAD RELIEF ON MACHINED THREADS
BREAK EDGES .016 MAX. ON MACHINED WORK
REMOVE BURRS, WELD SPLATTER & LOOSE SCALE
IN ACCORDANCE WITH ASME Y14.5M & B46.1

SHOP ORDERS
SER NO. -
ACCT NO. | NO. REQD | DATE ISSD -
DEL TO | DATE REQD -
SURFACE TREATMT CLEAR ANODIZE
IDENT METHOD TAG
PROJECT NUMBER N/A
PROJECT NAME N/A
DWG BY A. Demello | DATE 05-Mar-02
CHK BY A. DeMello | DATE
APR BY A. DeMello | DATE

ERNEST ORLANDO LAWRENCE
BERKELEY NATIONAL LABORATORY
UNIVERSITY OF CALIFORNIA - BERKELEY

SNS - FES MEBT
MECHANICAL SUB-SYSTEMS
BCM 1 SUPPORT BASE

MICROFILMED:
PATENT CLEAR:

DWG. TYPE	SHOWN ON	SCALE: 1/1	DO NOT SCALE PRINTS
PART	25B610	SHEET 1 OF 1	
DESIGN ACCT. NO.	CATEGORY CODE	DWG. NO. SIZE	REV.
-	FE3330	25B7643	A

DWG. NO. 25B7643 SIZE A REV. SH. 1

Dwg. File: 25B764 Model File: 25B764

DWG. NO.	SIZE	REV.	SH.
25B7651		A	1

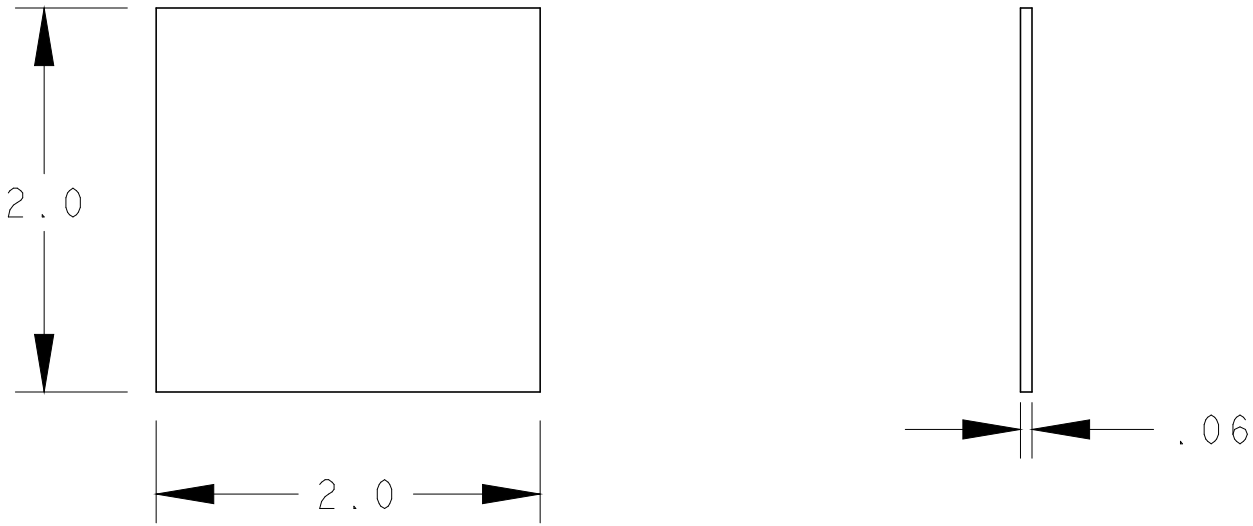

REV	DWG	CHK	DATE	CHANGES	DESCRIPTION	MATERIAL
A	AD		4/02	INITIAL RELEASE	-	1/16" RUBBER SHEET

UNLESS OTHERWISE SPECIFIED

PROJECTION:

TOLERANCES		
	X.X ±0.1	FRAC. ±1/64
	X.XX ±0.03	Angles ±1.0°
	X.XXX ±0.010	FINISH 125

DO NOT SCALE PRINT

THREADS ARE CLASS 2
CHAMFER ENDS OF ALL SCREW TREADS 30°
CUT ROUND, 1.5 THREAD RELIEF ON MACHINED THREADS
BREAK EDGES .016 MAX. ON MACHINED WORK
REMOVE BURRS, WELD SPLATTER & LOOSE SCALE
IN ACCORDANCE WITH ASME Y14.5M & B46.1

SHOP ORDERS

ACCT NO.	NO. REQD	SER NO.	-
DEL TO		DATE ISSD	-
		DATE REQD	-
SURFACE TREATMT	-		
IDENT METHOD	TAG		
PROJECT NUMBER	N/A		
PROJECT NAME	N/A		
DWG BY	Allan DeMello	DATE	09-Apr-02
CHK BY	Allan DeMello	DATE	
APR BY	Allan DeMello	DATE	

ERNEST ORLANDO LAWRENCE BERKELEY NATIONAL LABORATORY
UNIVERSITY OF CALIFORNIA - BERKELEY

SNS - FES MEBT
MECHANICAL SUB-SYSTEMS
BCM 1 RUBBER CUSHION

MICROFILMED:	DWG. TYPE	SHOWN ON	SCALE: 1/1	DO NOT SCALE PRINTS
	PART	25B610	SHEET 1 OF 1	
PATENT CLEAR:	DESIGN ACCT. NO.	CATEGORY CODE	DWG. NO.	SIZE / REV.
	-	3330	25B7651	A

Dwg. File: 25B765 Model File: 25B765

Rev. 1/29/2000 J. R. Osborn

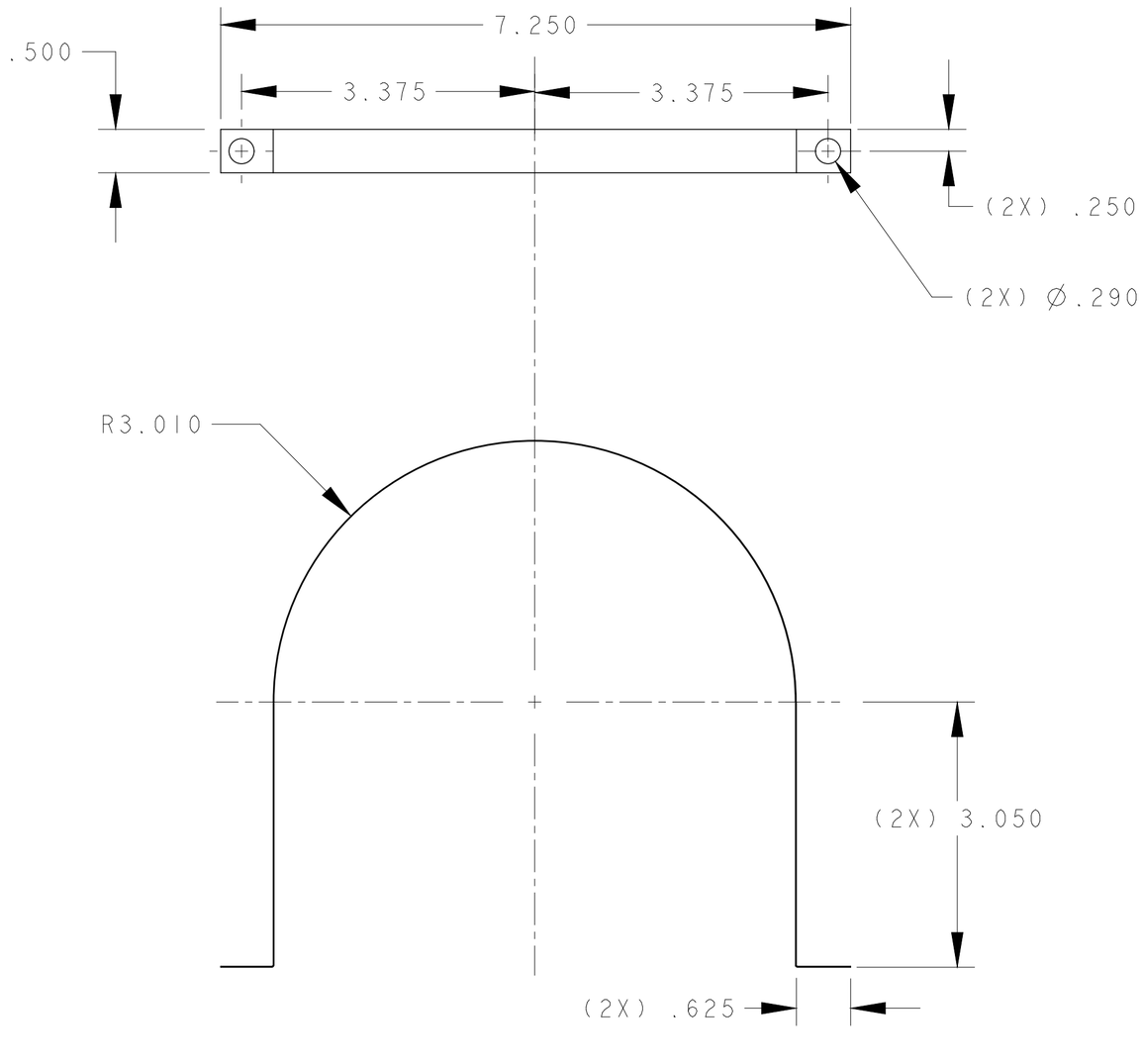

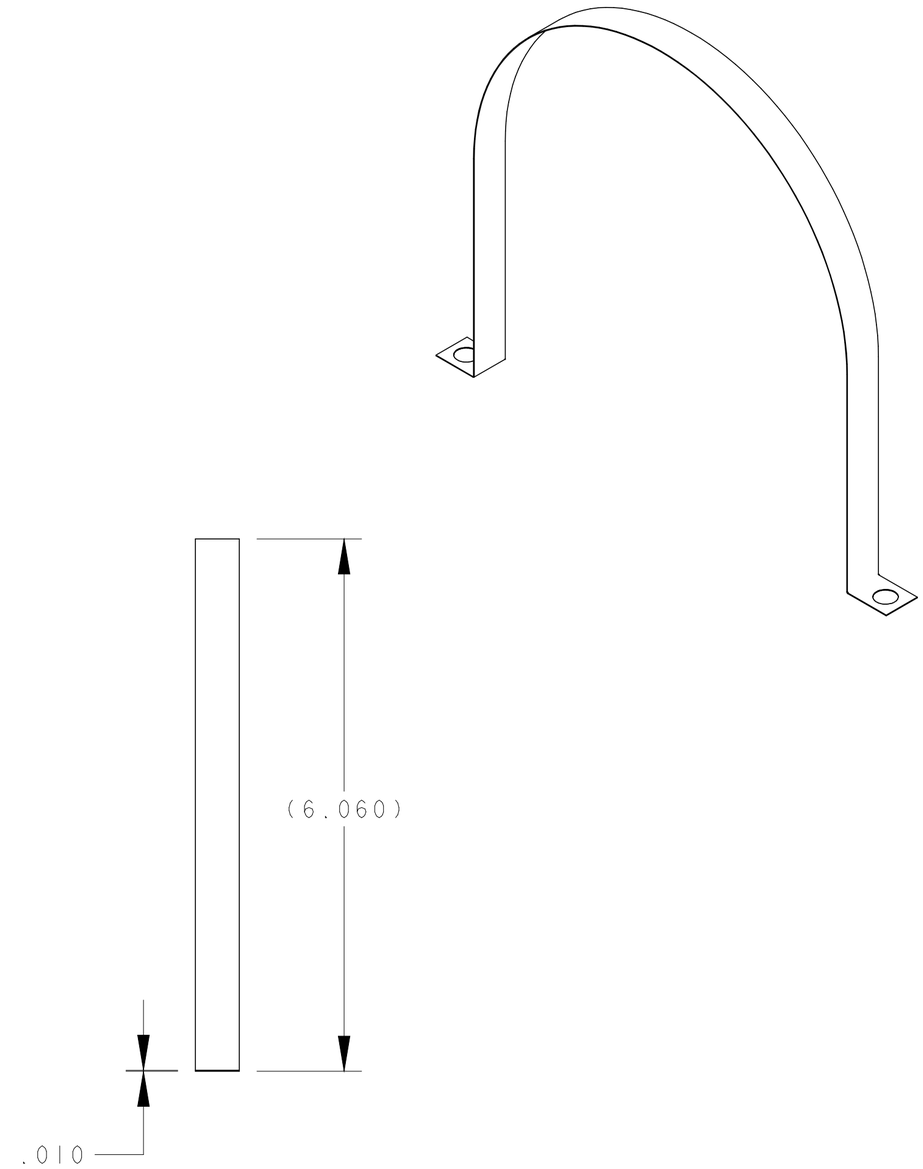

A	AD			3/5/02	INITIAL RELEASE
REV	DWG	CHK	ZONE	DATE	CHANGES

UNLESS OTHERWISE SPECIFIED
PROJECTION:

TOLERANCES	
X.X ± 0.1	FRAC. ± 1/64
X.XX ± 0.03	Angles ± 1.0°
X.XXX ± 0.010	FINISH 125

DO NOT SCALE PRINT

THREADS ARE CLASS 2
CHAMFER ENDS OF ALL SCREW TREADS 30°
CUT ROUND, 1.5 THREAD RELIEF ON MACHINED THREADS
BREAK EDGES .016 MAX. ON MACHINED WORK
REMOVE BURRS, WELD SPLATTER & LOOSE SCALE
IN ACCORDANCE WITH ASME Y14.5M & B46.1

-		STAINLESS STEEL	-
DESCRIPTION		MATERIAL	MAT. LOCATION

SHOP ORDERS

SER NO.	-		
ACCT NO.	NO. REQD	DATE ISSD	-
DEL TO		DATE REQD	-
SURFACE TREATMT	-		
IDENT METHOD	TAG		
PROJECT NUMBER	N/A		
PROJECT NAME	N/A		
DWG BY	Allan DeMello	DATE	05-Mar-02
CHK BY	Allan DeMello	DATE	
APR BY	Allan DeMello	DATE	

ERNEST ORLANDO LAWRENCE
BERKELEY NATIONAL LABORATORY
UNIVERSITY OF CALIFORNIA - BERKELEY

SNS - FES MEBT
MECHANICAL SUB-SYSTEMS
BCM I RETAINER STRAP, 0.010" THICK

MICROFILMED:	DWG. TYPE: PART	SHOWN ON: 25B610	SCALE: 3/4 — DO NOT SCALE PRINTS — SHEET 1 OF 1
PATENT CLEAR:	DESIGN ACCT. NO.: -	CATEGORY CODE: FE3330	DWG. NO.: 25B7663 — SIZE: A — REV.: A

DWG. NO. 25B7663 SIZE A REV. SH. 1

Dwg. File: 25B766 Model File: 25B766
Rev. 1/29/2009 L. Gabriel

DWG. NO.	SIZE	REV.	SH.
25B7671		A	1

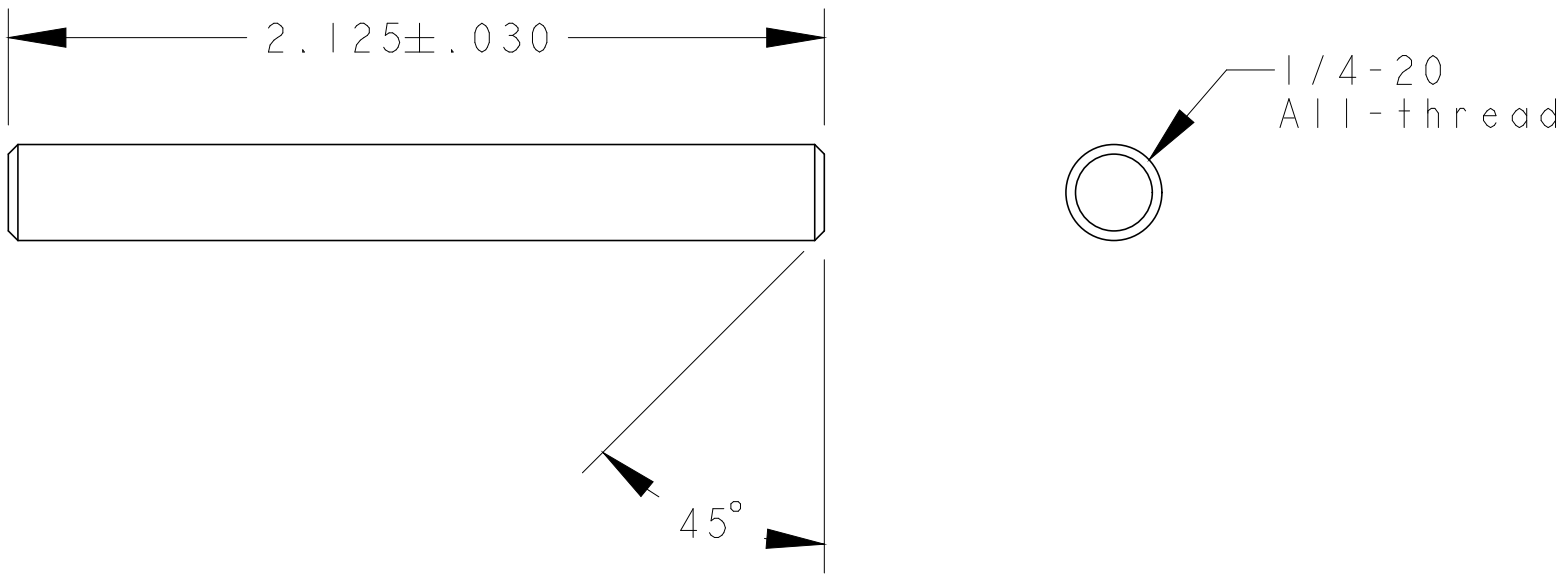

REV	DWG	CHK	DATE	CHANGES	DESCRIPTION	MATERIAL
A	AD		4/02	INITIAL RELEASE	-	STAINLESS STEEL

UNLESS OTHERWISE SPECIFIED

PROJECTION:

TOLERANCES		
	X.X ±0.1	FRAC. ±1/64
	X.XX ±0.03	Angles ±1.0°
	X.XXX ±0.010	FINISH 125

DO NOT SCALE PRINT

THREADS ARE CLASS 2
CHAMFER ENDS OF ALL SCREW TREADS 30°
CUT ROUND, 1.5 THREAD RELIEF ON MACHINED THREADS
BREAK EDGES .016 MAX. ON MACHINED WORK
REMOVE BURRS, WELD SPLATTER & LOOSE SCALE
IN ACCORDANCE WITH ASME Y14.5M & B46.1

SHOP ORDERS

ACCT NO.	NO. REQD	SER NO.	-
DEL TO		DATE ISSD	-
		DATE REQD	-
SURFACE TREATMT	-		
IDENT METHOD	TAG		
PROJECT NUMBER	N/A		
PROJECT NAME	N/A		
DWG BY	Allan DeMello	DATE	09-Apr-02
CHK BY	Allan DeMello	DATE	
APR BY	Allan DeMello	DATE	

ERNEST ORLANDO LAWRENCE BERKELEY NATIONAL LABORATORY
UNIVERSITY OF CALIFORNIA - BERKELEY

SNS - FES MEBT
MECHANICAL SUB-SYSTEMS
BCM 1 SUPPORT STUD

MICROFILMED:	DWG. TYPE	SHOWN ON	SCALE: 2/1	DO NOT SCALE PRINTS
	PART	25B610	SHEET 1 OF 1	
PATENT CLEAR:	DESIGN ACCT. NO.	CATEGORY CODE	DWG. NO.	SIZE / REV.
	-	3330	25B7671	A

Dwg. File: 25B767 Model File: 25B767

Rev. 1/29/2000 J. R. Osborn