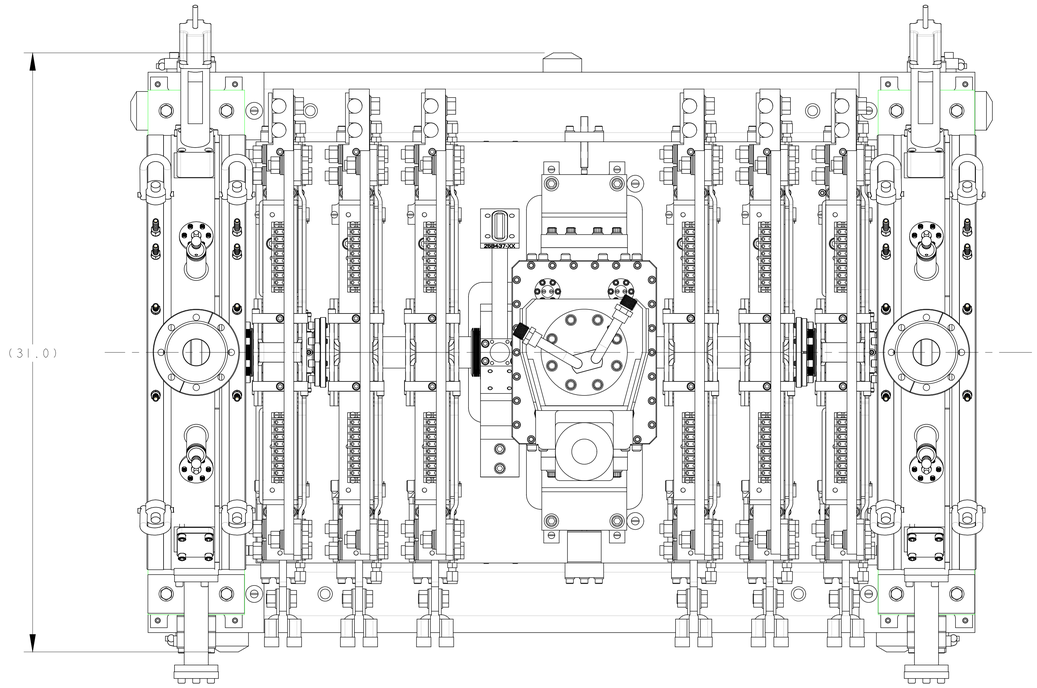

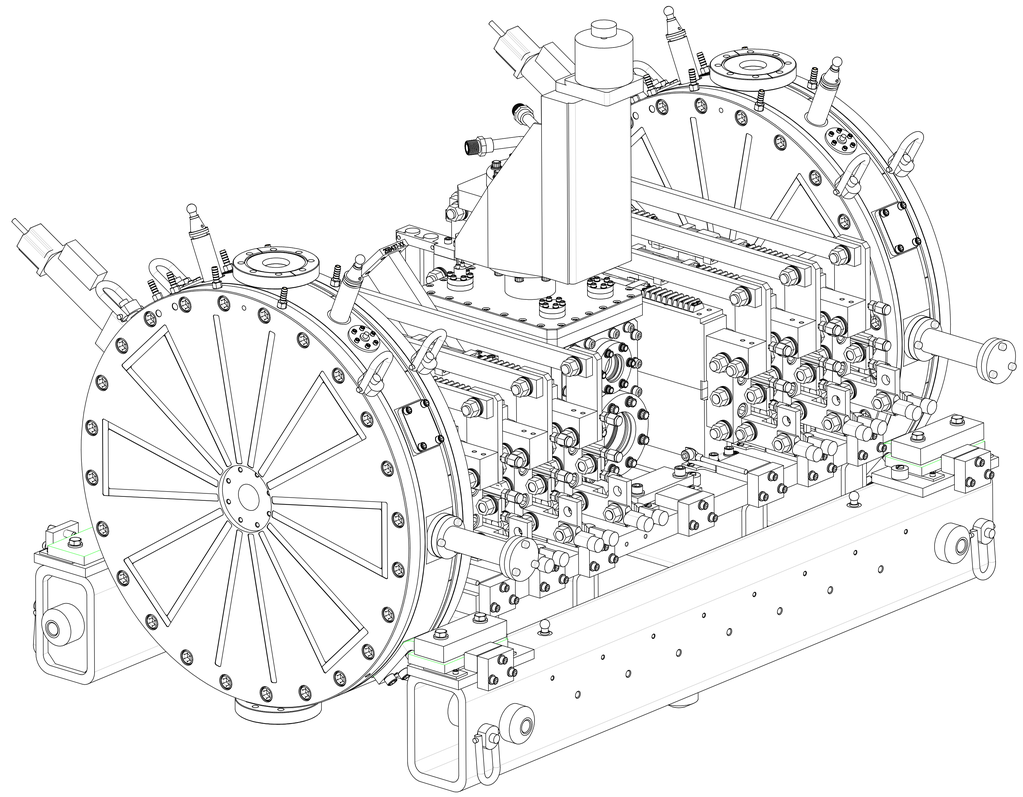

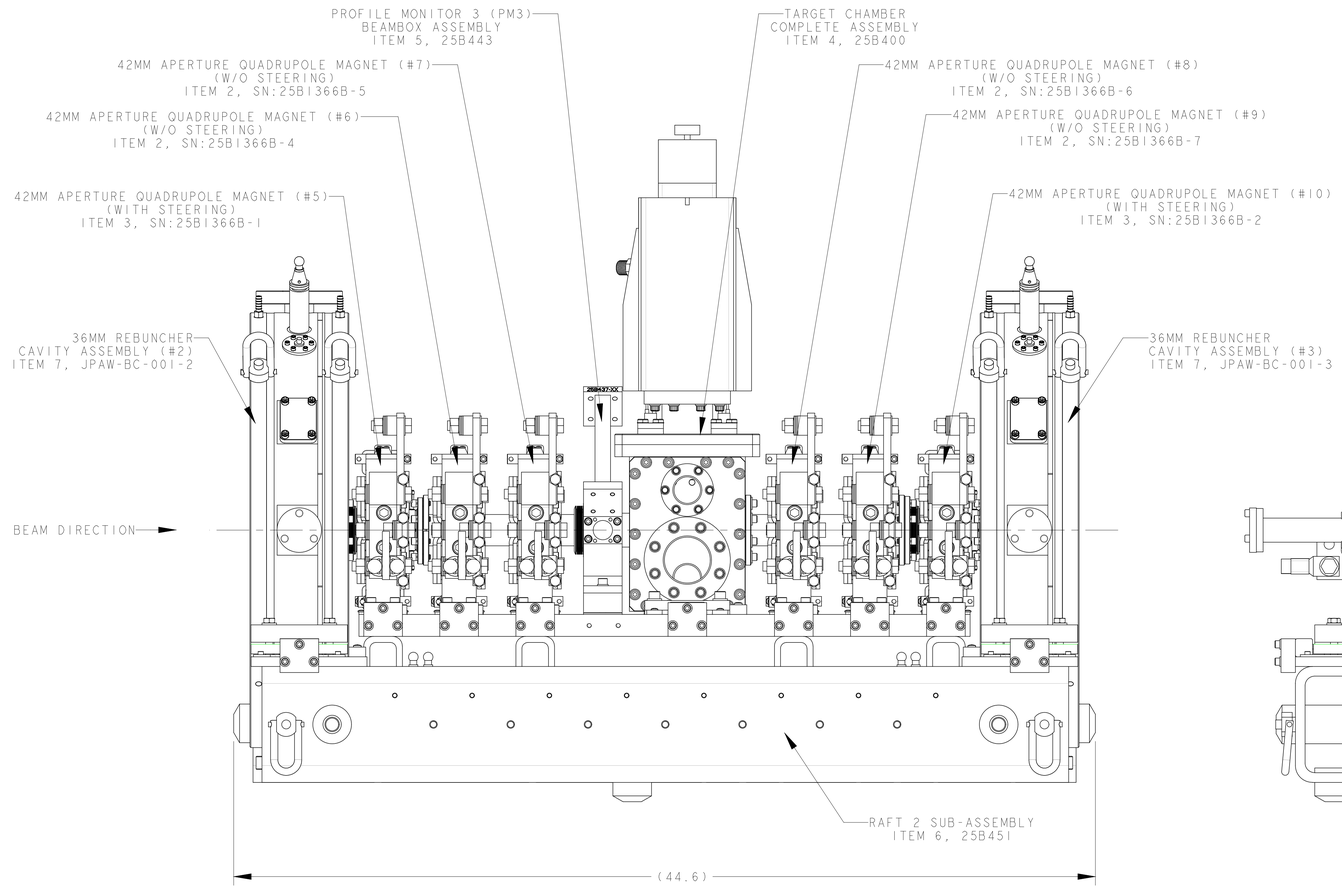

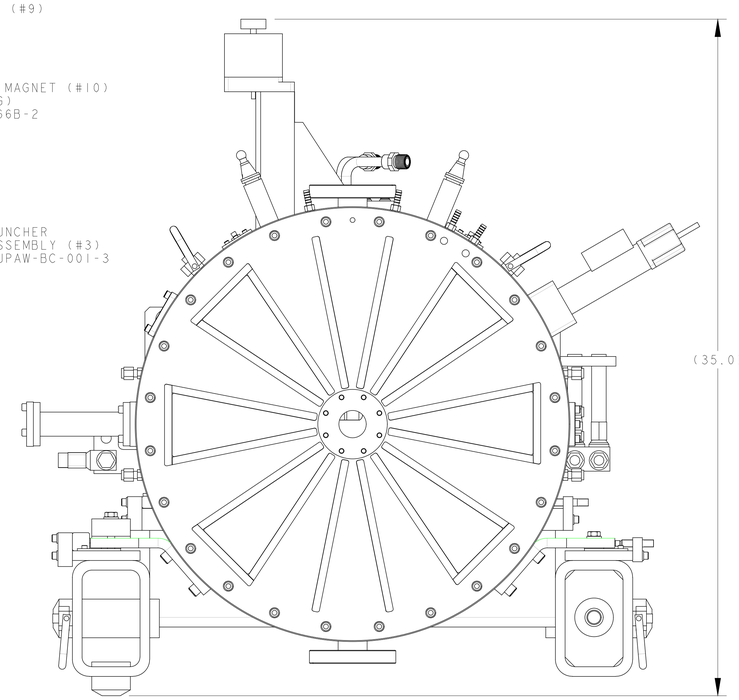

ITEM	PART NO	REQD	DESCRIPTION	MATERIAL
21	25B702	2	T-BAR, REBUNCHER	SST, 304 PRODEC
20	-	4	3/8-16 X 1-1/4 SHC SCREW	SS 18-8
19	-	24	FLAT WASHER, 5/16", MCMASTER-CARR #98017A690 OR EQUIV.	SS 18-8
18	-	8	4-40 x 1" SHCS	SS 18-8
17	-	12	FLAT WASHER, 3/8", MCMASTER-CARR #98370A019 OR EQUIV.	SS 18-8
16	25B687	1	DETAIL ASSEMBLY, BEAM PIPE 5	SS 347
15	25B684	1	DETAIL ASSEMBLY, BEAM PIPE 6	SS 347
14	25B712-02	4	BPM SHIM CLAMP, LOWER	SS 304
13	25B712-01	4	BPM SHIM CLAMP	SS 304
12	-	8	SHIM STOCK	SS
11	25B768	1	PROFILE MONITOR SPACER SHIM	ALUMINUM
10	-	24	SOCKET HEAD CAP SCREW, 5/16-18 x 1"	18-8 SS
9	-	4	3/8"-16 UNC HEX. HD. BOLT, 2.5 LG	18-8 SS
8	-	4	3/8"-16 UNC HEX. HD. BOLT, 2.00 LG	18-8 SS
7	JPAW-BC-001	2	36MM REBUNCHER CAVITY	-
6	25B451	1	RAFT 2 SUB-ASSEMBLY	-
5	25B443	1	PM3 BEAMBOX ASSEMBLY	-
4	25B400	1	TARGET CHAMBER, COMPLETE ASSEMBLY	-
3	25B159	2	42MM APERTURE QUADRUPOLE WITH STEERING	-
2	25B160	4	42MM APERTURE QUADRUPOLE W/O STEERING	-
1	25B184	2	40 MM BEAM POSITION MONITOR	

APPROXIMATE WEIGHT = 2508 lb.

REV	DWG	CHK	ZONE	DATE	CHANGES
A	AD			3/02	INITIAL RELEASE

UNLESS OTHERWISE SPECIFIED
PROJECTION:
TOLERANCES: X.X ± 0.1 FRAC. ± 1/64; X.XX ± 0.03 Angles ± 1.0°; X.XXX ± 0.010 FINISH 125
DO NOT SCALE PRINT
THREADS ARE CLASS 2
CHAMFER ENDS OF ALL SCREW THEADS 30°
CUT ROUND, 1.5 THREAD RELIEF ON MACHINED THREADS
BREAK EDGES .016 MAX. ON MACHINED WORK
REMOVE BURRS, WELD SPLATTER & LOOSE SCALE
IN ACCORDANCE WITH ASME Y14.5M & B46.1

SHOP ORDERS
ACCT NO.: NO. REQD
DEL ID:
SURFACE TREATMT: -
IDENT METHOD: TAG
PROJECT NUMBER: na
PROJECT NAME: N/A
DWN BY: Allan DeMello DATE 06-Jun-01
CHK BY: D. OSHATZ DATE
APP BY: D. OSHATZ DATE
SER NO.: -
DATE ISSD: -
DATE REQD: -

ERNEST ORLANDO LAWRENCE BERKELEY NATIONAL LABORATORY
UNIVERSITY OF CALIFORNIA - BERKELEY

SNS - FES MEBT
GENERAL
MEBT RAFT 2 ASSEMBLY

MICROFILMED: | DWG. TYPE: ASSEM | SHOWN ON: 25B603 | SCALE: 33/100 | DO NOT SCALE PRINTS
SHEET 1 OF 4
PATENT CLEAR: | DESIGN ACCT. NO.: - | CATEGORY CODE: FE3330 | DWG. NO.: 25B6116 | SIZE: A | REV.:

DWG. NO. 25B6116 A 1

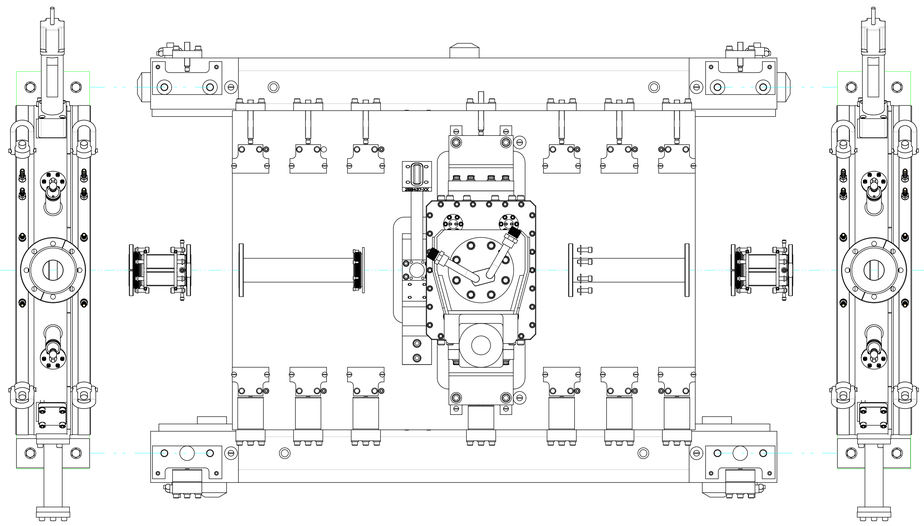

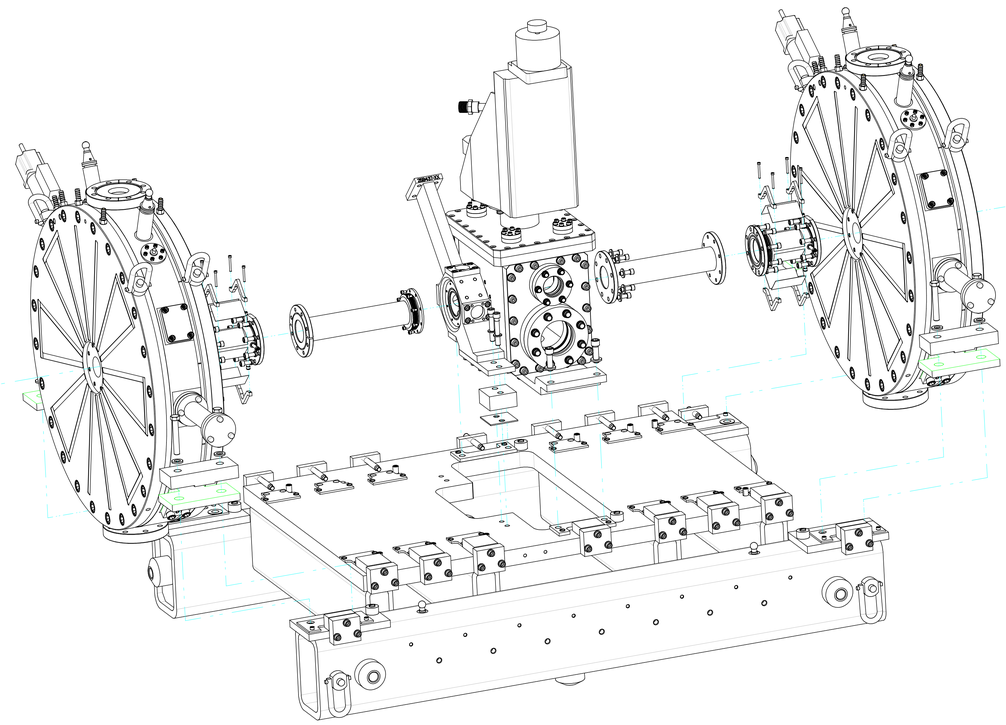

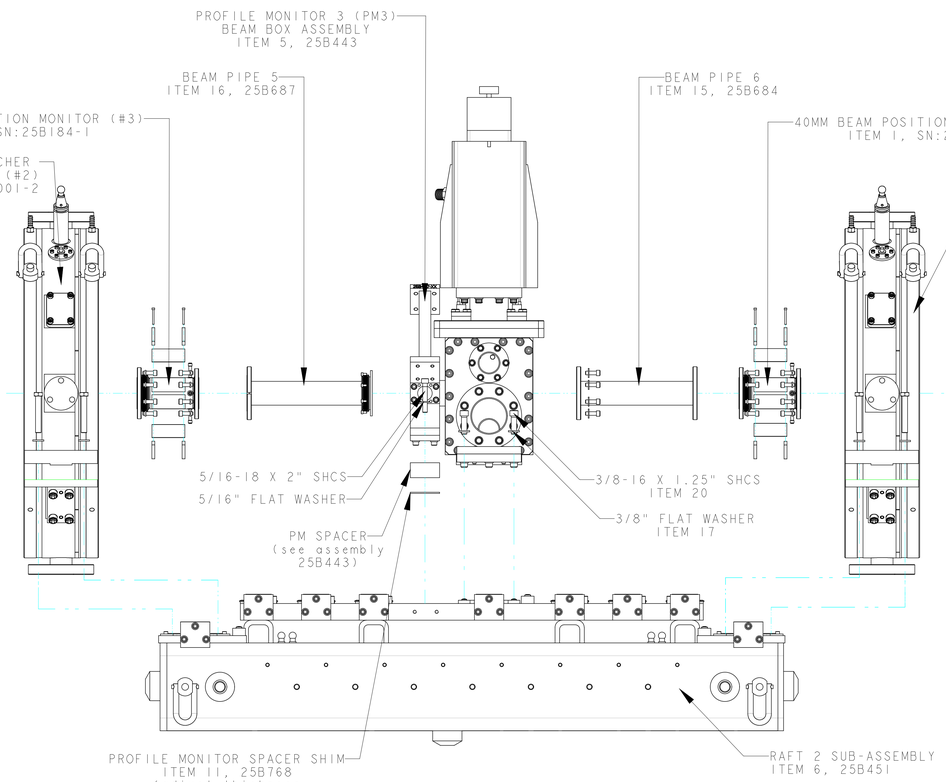

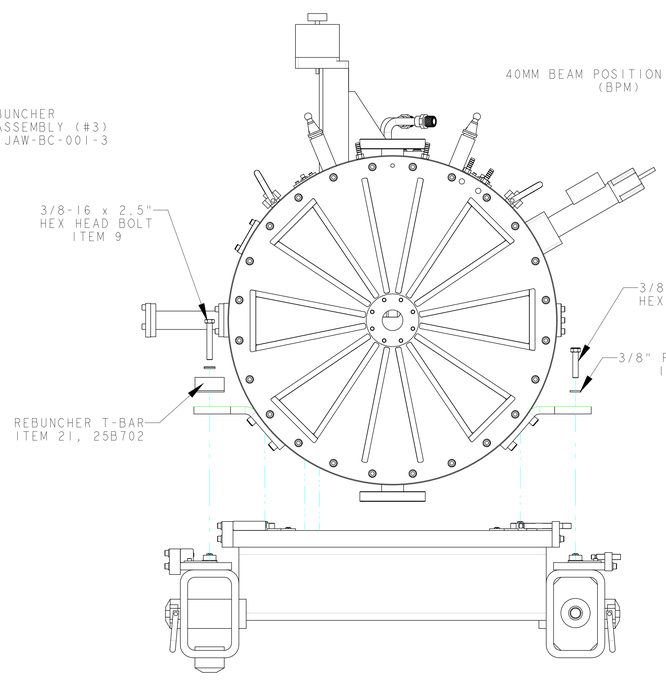

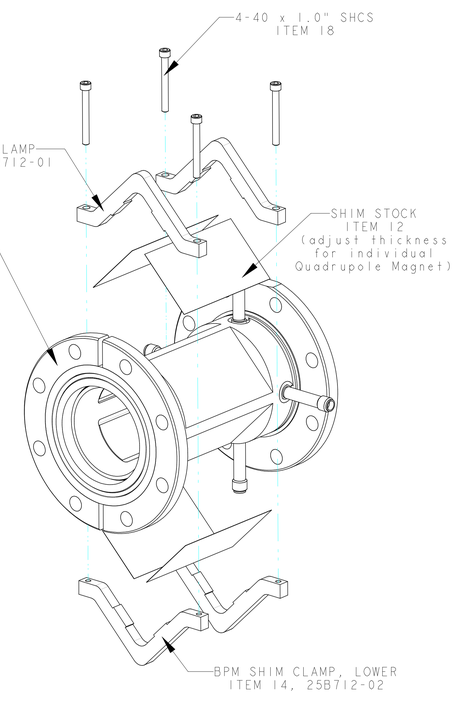

BPM
SHIM/SHIM CLAMP
PLACEMENT

SCALE 1/1

NOTE:

1. THIS DRAWING ILLUSTRATES THE ASSEMBLY OF THE BEAMLINE.
2. ALL QUADRUPOLE MAGNETS ARE REMOVED FOR CLARITY.

REV	DWG	CHK	ZONE	DATE	CHANGES
A	AD			3/02	INITIAL RELEASE

UNLESS OTHERWISE SPECIFIED
PROJECTION:
TOLERANCES: X.X ± 0.1 FRAC. ± 1/64; X.XX ± 0.03 Angles ± 1.0°; X.XXX ± 0.010 FINISH 125√
DO NOT SCALE PRINT
THREADS ARE CLASS 2
CHAMFER ENDS OF ALL SCREW THREADS 30°
CUT ROUND, 1.5 THREAD RELIEF ON MACHINED THREADS
BREAK EDGES .016 MAX. ON MACHINED WORK
REMOVE BURRS, WELD SPLATTER & LOOSE SCALE
IN ACCORDANCE WITH ASME Y14.5M & B46.1

SHOP ORDERS
ACCT NO. / REQD
DEL DATE / REQD
SURFACE TREATMENT -
IDENT METHOD TAG
PROJECT NUMBER na
PROJECT NAME N/A
DWN BY Allan DeMello DATE 30-Oct-01
CHK BY D. OSHATZ DATE
APP BY D. OSHATZ DATE

ERNEST ORLANDO LAWRENCE BERKELEY NATIONAL LABORATORY
UNIVERSITY OF CALIFORNIA BERKELEY

SNS - FES MEBT
GENERAL
MEBT RAFT 2 ASSEMBLY

MICROFILMED: PATENT CLEAR:
DWG. TYPE ASSEM
SHOWN ON 25B603
SCALE 1/4
DO NOT SCALE PRINTS
SHEET 2 OF 4
DESIGN ACCT. NO. -
CATEGORY CODE FE3330
DWG. NO. 25B6116
SIZE A
REV.

DWG. NO. 25B6116 A 2

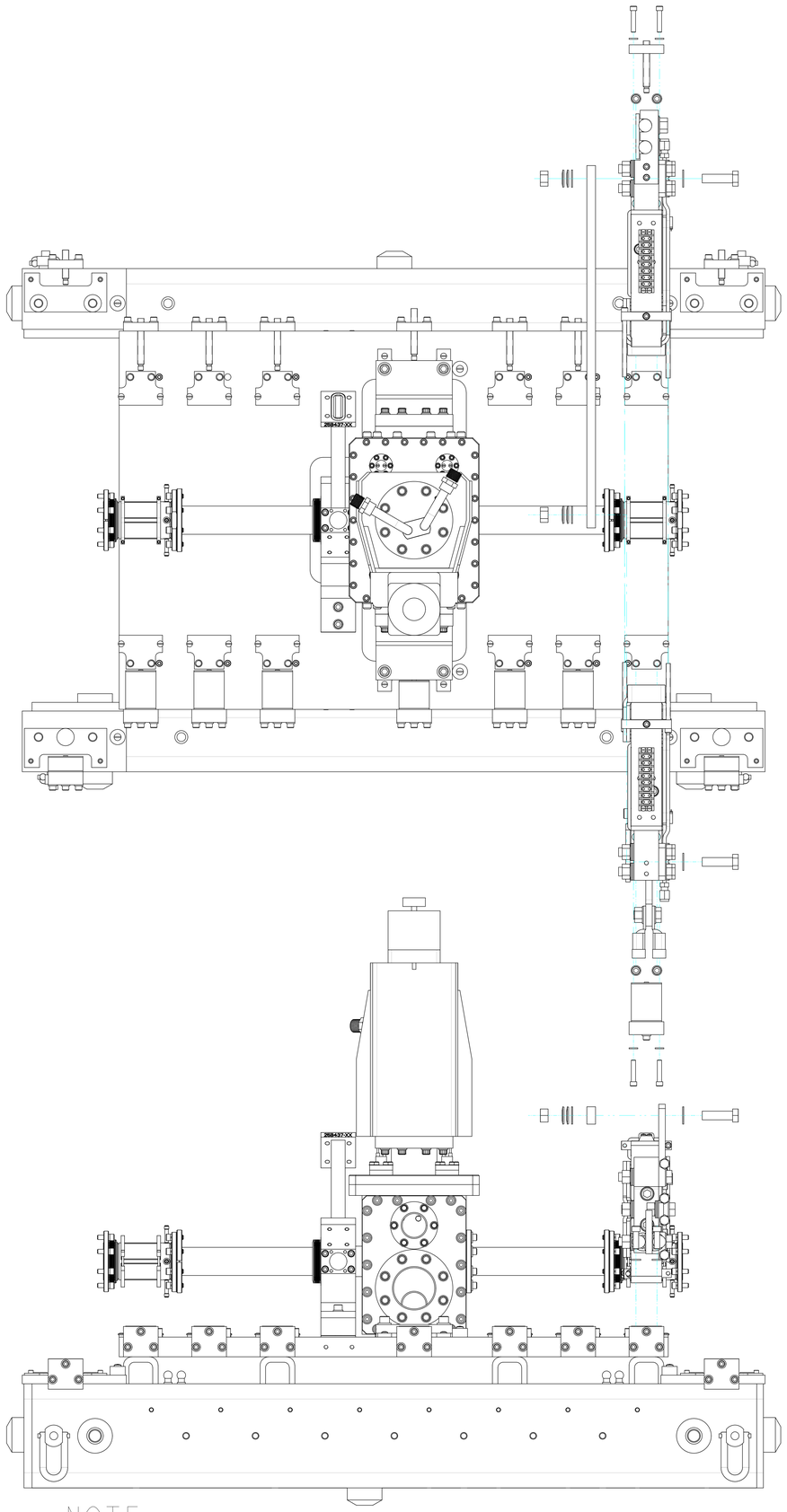

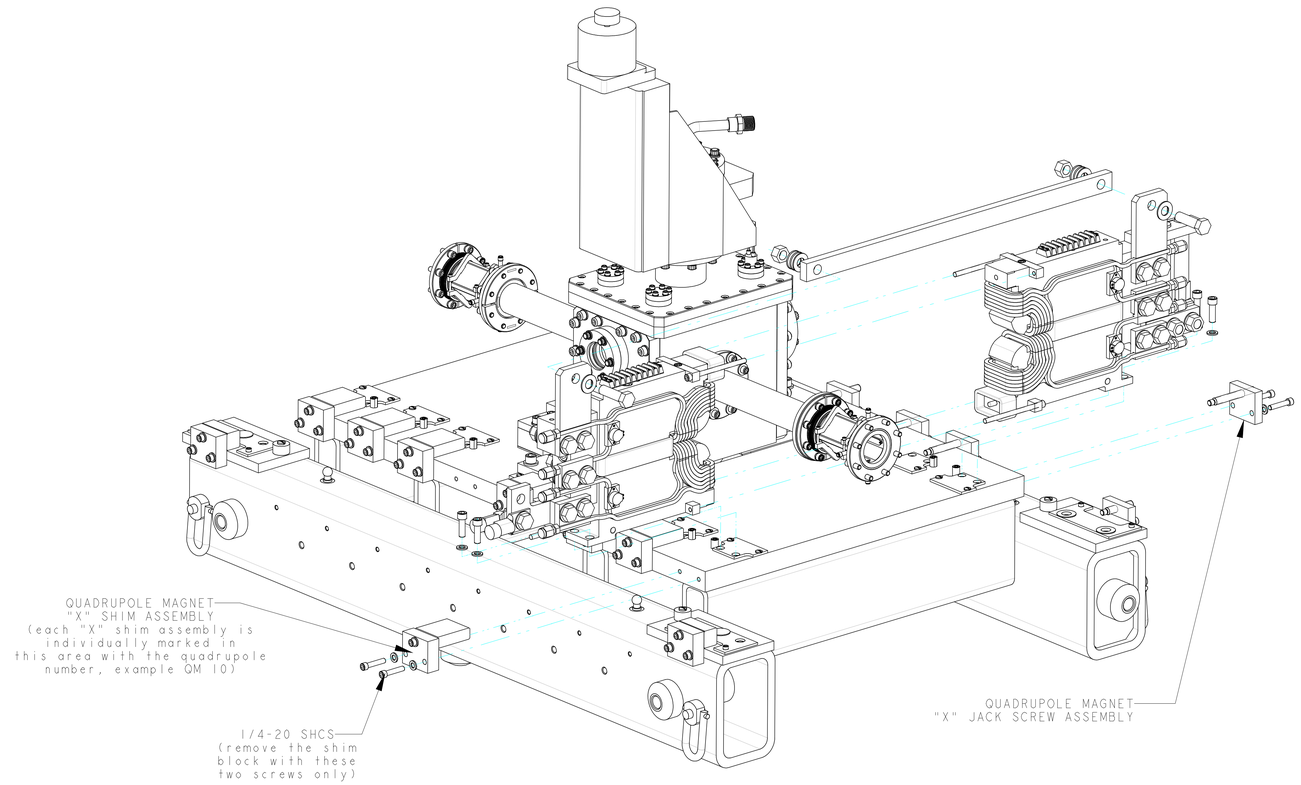

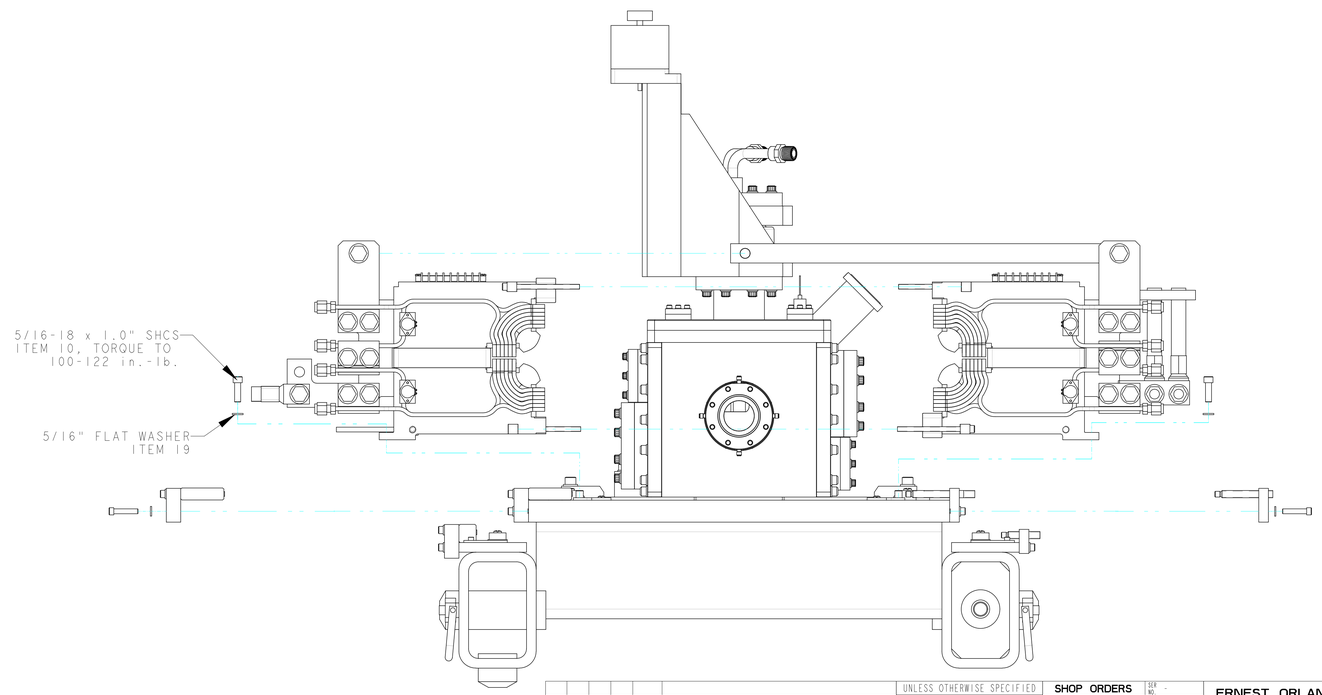

NOTE:

1. THIS DRAWING ILLUSTRATES THE QUADRUPOLE MAGNET SPLIT FOR ASSEMBLY AROUND THE BEAMLINE.
2. BOTH REBUNCHERS AND 5 QUADRUPOLE MAGNETS ARE REMOVED FOR CLARITY.

REV	DWG	CHK	ZONE	DATE	CHANGES
A	AD			3/02	INITIAL RELEASE

UNLESS OTHERWISE SPECIFIED
PROJECTION:
TOLERANCES: X.X ± 0.1 FRAC. ± 1/64; X.XX ± 0.03 Angles ± 1.0°; X.XXX ± 0.010 FINISH 125
DO NOT SCALE PRINT
THREADS ARE CLASS 2
CHAMFER ENDS OF ALL SCREW THREADS 30°
CUT ROUND, 1.5 THREAD RELIEF ON MACHINED THREADS
BREAK EDGES .016 MAX. ON MACHINED WORK
REMOVE BURRS, WELD SPLATTER & LOOSE SCALE
IN ACCORDANCE WITH ASME Y14.5M & B46.1

SHOP ORDERS
ACCT NO.: REQD
DEL TO:
SURFACE TREATMT:
IDENT METHOD: TAG
PROJECT NUMBER: na
PROJECT NAME: N/A
DWN BY: Allan DeMello DATE: 05-Nov-01
CHK BY: D. OSHATZ DATE:
APR BY: D. OSHATZ DATE:
SER NO.:
DATE ISSD:
DATE REQD:

ERNEST ORLANDO LAWRENCE BERKELEY NATIONAL LABORATORY
UNIVERSITY OF CALIFORNIA - BERKELEY

SNS - FES MEBT
GENERAL
MEBT RAFT 2 ASSEMBLY

MICROFILMED:	DWG. TYPE	SHOWN ON	SCALE: 33/100	DO NOT SCALE PRINTS
	ASSEM	25B603	SHEET 3 OF 4	
PATENT CLEAR:	DESIGN ACCT. NO.	CATEGORY CODE	DWG. NO.	SIZE / REV.
	-	FE3330	25B6116	A

DWG. NO. 25B6116 | A | 3

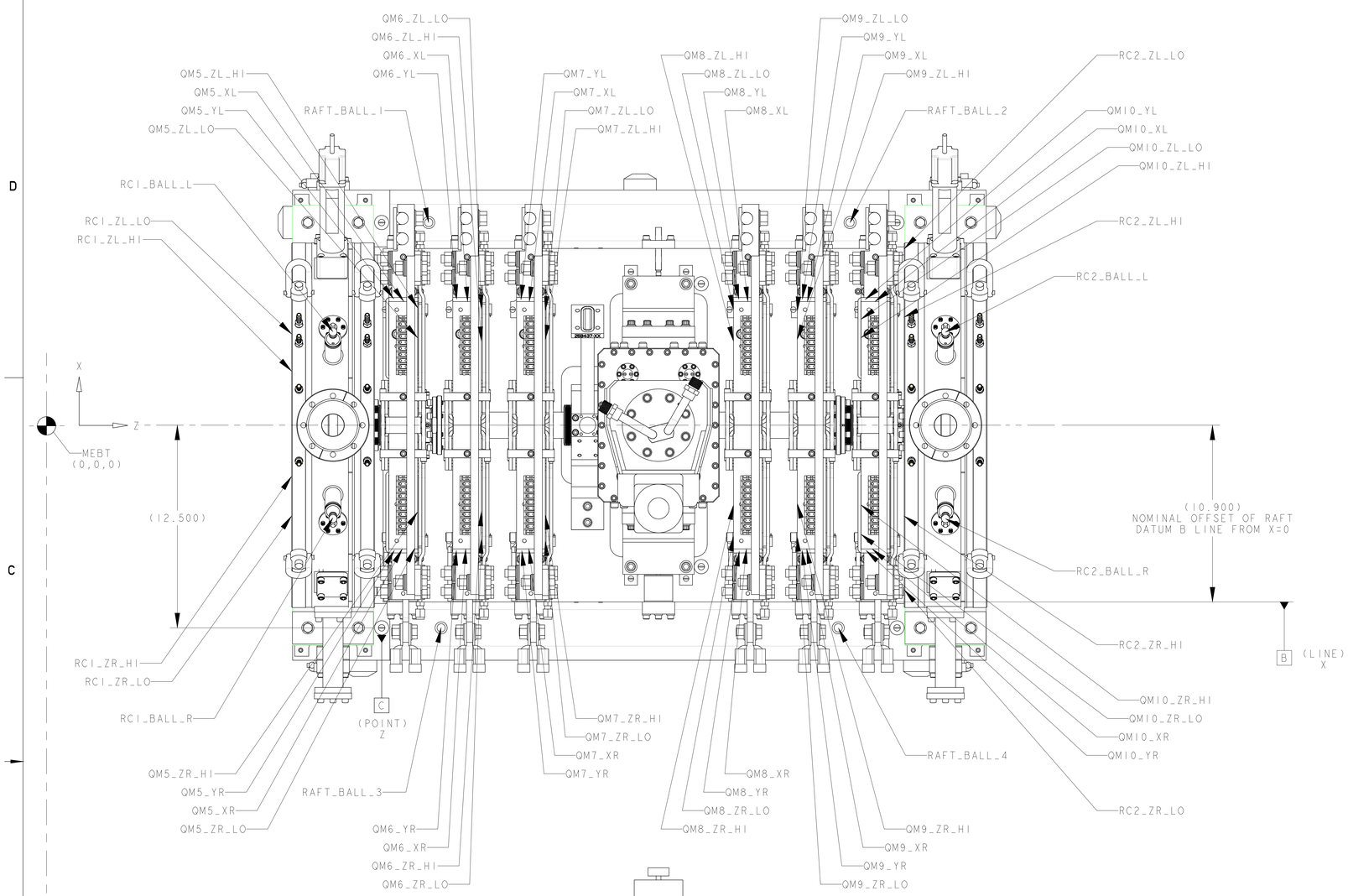

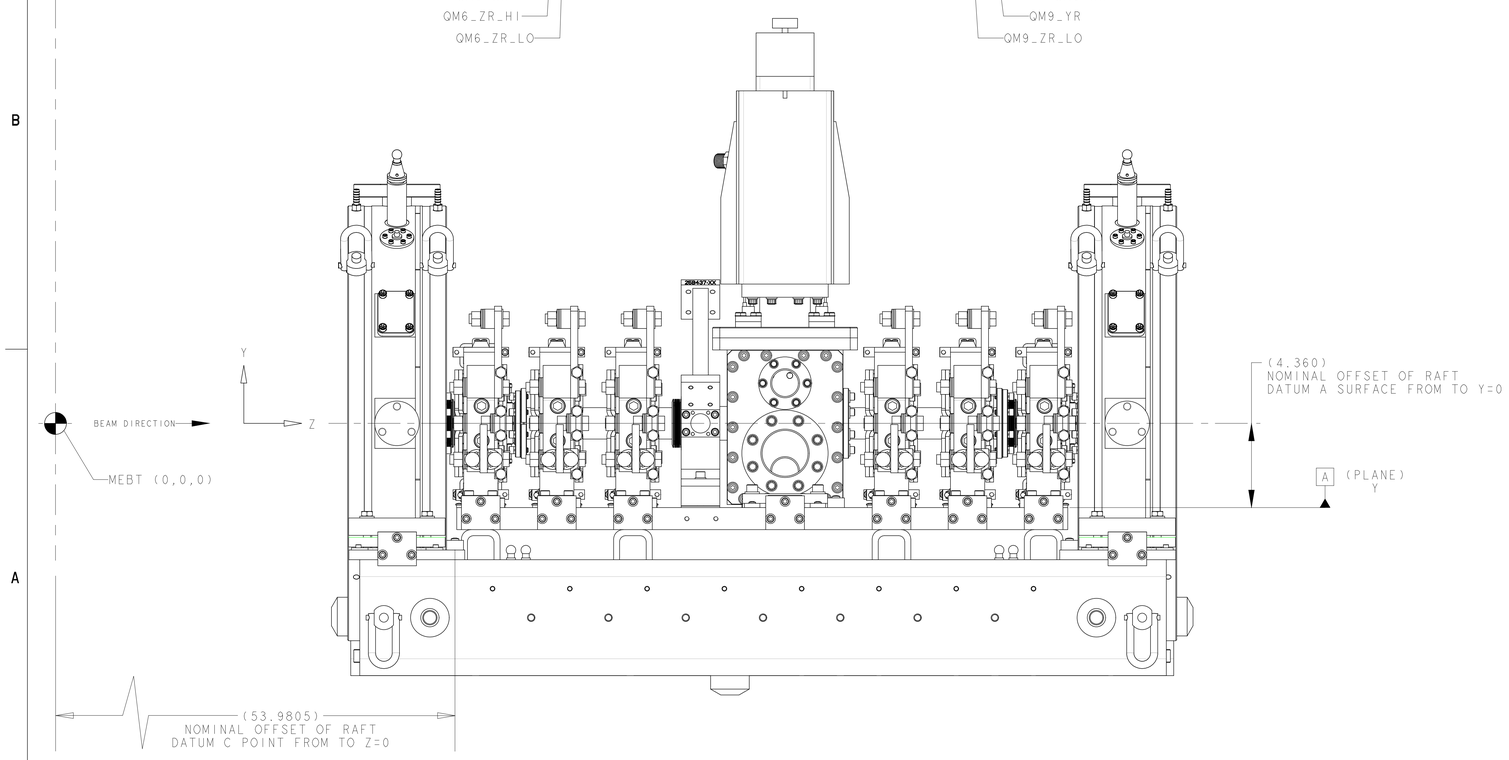

MEBT RAFT 2
CMM MEASUREMENT RESULTS

(ALL VALUES ARE IN INCHES)

LOCATION	MEASURED x	MEASURED y	MEASURED z	NOMINAL	DEVIATION	DESCRIPTION
QM5_XL	7.6265	—	—	7.6270	-0.0005	PLANE
QM5_YL	—	3.6814	—	3.6830	-0.0016	PLANE
QM5_YR	—	3.6841	—	3.6830	0.0011	PLANE
QM5_XR	-7.6267	—	—	7.6270	0.0003	PLANE
QM5_ZR_HI	—	—	56.1950	56.2010	-0.0060	POINT
QM5_ZR_LO	—	—	56.1943	56.2010	-0.0067	POINT
QM5_ZL_HI	—	—	56.1917	56.2010	-0.0093	POINT
QM5_ZL_LO	—	—	56.1944	56.2010	-0.0066	POINT
QM6_XL	7.6254	—	—	7.6270	-0.0016	PLANE
QM6_YL	—	3.6815	—	3.6830	-0.0015	PLANE
QM6_YR	—	3.6838	—	3.6830	0.0008	PLANE
QM6_XR	-7.6276	—	—	7.6270	-0.0006	PLANE
QM6_ZR_HI	—	—	60.1285	60.1380	-0.0095	POINT
QM6_ZR_LO	—	—	60.1314	60.1380	-0.0066	POINT
QM6_ZL_HI	—	—	60.1355	60.1380	-0.0025	POINT
QM6_ZL_LO	—	—	60.1323	60.1380	-0.0057	POINT
QM7_XL	7.6261	—	—	7.6270	-0.0009	PLANE
QM7_YL	—	3.6820	—	3.6830	-0.0010	PLANE
QM7_YR	—	3.6835	—	3.6830	0.0005	PLANE
QM7_XR	-7.6270	—	—	7.6270	0.0000	PLANE
QM7_ZR_HI	—	—	64.0687	64.0750	-0.0063	POINT
QM7_ZR_LO	—	—	64.0684	64.0750	-0.0066	POINT
QM7_ZL_HI	—	—	64.0722	64.0750	-0.0028	POINT
QM7_ZL_LO	—	—	64.0692	64.0750	-0.0058	POINT
QM8_XL	7.6273	—	—	7.6270	0.0003	PLANE
QM8_YL	—	3.6834	—	3.6830	0.0004	PLANE
QM8_YR	—	3.6826	—	3.6830	-0.0004	PLANE
QM8_XR	-7.6263	—	—	7.6270	0.0007	PLANE
QM8_ZR_HI	—	—	75.6862	75.6890	-0.0028	POINT
QM8_ZR_LO	—	—	75.6920	75.6890	0.0030	POINT
QM8_ZL_HI	—	—	75.6897	75.6890	0.0007	POINT
QM8_ZL_LO	—	—	75.6934	75.6890	0.0044	POINT
QM9_XL	7.6266	—	—	7.6270	-0.0004	PLANE
QM9_YL	—	3.6838	—	3.6830	0.0008	PLANE
QM9_YR	—	3.6821	—	3.6830	-0.0009	PLANE
QM9_XR	-7.6270	—	—	7.6270	-0.0000	PLANE
QM9_ZR_HI	—	—	79.6294	79.6260	0.0034	POINT
QM9_ZR_LO	—	—	79.6299	79.6260	0.0039	POINT
QM9_ZL_HI	—	—	79.6322	79.6260	0.0062	POINT
QM9_ZL_LO	—	—	79.6308	79.6260	0.0048	POINT
QM10_XL	7.6263	—	—	7.6270	-0.0007	PLANE
QM10_YL	—	3.6836	—	3.6830	0.0006	PLANE
QM10_YR	—	3.6814	—	3.6830	-0.0016	PLANE
QM10_XR	-7.6272	—	—	7.6270	-0.0002	PLANE
QM10_ZR_HI	—	—	83.5647	83.5630	0.0017	POINT
QM10_ZR_LO	—	—	83.5678	83.5630	0.0048	POINT
QM10_ZL_HI	—	—	83.5662	83.5630	0.0032	POINT
QM10_ZL_LO	—	—	83.5683	83.5630	0.0053	POINT
RC1_ZL_HI	—	—	48.4005	48.425	-0.0245	POINT
RC1_ZL_LO	—	—	48.4113	48.425	-0.0137	POINT
RC1_ZR_HI	—	—	48.4147	48.425	-0.0103	POINT
RC1_ZR_LO	—	—	48.4409	48.425	0.0159	POINT
RC1_BALL_R (Rebuncher #2)	-5.7474	13.9229	50.9512	—	—	SPHERICITY
RC1_BALL_L (Rebuncher #2)	5.7620	13.9114	50.9316	—	—	SPHERICITY
RC2_ZL_HI	—	—	86.2007	86.2205	-0.0198	POINT
RC2_ZL_LO	—	—	86.2112	86.2205	-0.0093	POINT
RC2_ZR_HI	—	—	86.2068	86.2205	-0.0137	POINT
RC2_ZR_LO	—	—	86.2216	86.2205	0.0011	POINT
RC2_BALL_R (Rebuncher #3)	-5.7540	13.9160	88.7476	—	—	SPHERICITY
RC2_BALL_L (Rebuncher #3)	5.7695	13.9105	88.7471	—	—	SPHERICITY
RAFT_BALL_1	12.5190	-6.5299	56.8219	—	—	SPHERICITY
RAFT_BALL_2	12.5165	-6.5726	82.8207	—	—	SPHERICITY
RAFT_BALL_3	-12.5188	-6.5435	57.6143	—	—	SPHERICITY
RAFT_BALL_4	-12.5249	-6.5551	82.1132	—	—	SPHERICITY

NOTE:

1. THIS DRAWING ILLUSTRATES THE LOCATIONS FROM WHICH FIDUCIAL DATA WAS TAKEN.

REV	DWG	CHK	ZONE	DATE	CHANGES
A	AD			3/02	INITIAL RELEASE

UNLESS OTHERWISE SPECIFIED
PROJECTION:
TOLERANCES: X.X ± 0.1 FRAC. ± 1/64; X.XX ± 0.03 Angles ± 1.0°; X.XXX ± 0.010 FINISH 125
DO NOT SCALE PRINT
THREADS ARE CLASS 2
CHAMFER ENDS OF ALL SCREW THREADS 30°
CUT ROUND, 1.5 THREAD RELIEF ON MACHINED THREADS
BREAK EDGES .016 MAX. ON MACHINED WORK
REMOVE BURRS, WELD SPLATTER & LOOSE SCALE
IN ACCORDANCE WITH ASME Y14.5M & B46.1

SHOP ORDERS
ACCT NO.: NO. REQD
DEL TO:
SURFACE TREATMENT:
IDENT METHOD: TAG
PROJECT NUMBER: na
PROJECT NAME: N/A
DWN BY: Allan DeMello DATE 23-Oct-01
CHK BY: D. OSHATZ DATE
APR BY: D. OSHATZ DATE
SEW NO.:
DATE ISSD:
DATE REQD:

ERNEST ORLANDO LAWRENCE BERKELEY NATIONAL LABORATORY
UNIVERSITY OF CALIFORNIA BERKELEY

SNS - FES MEBT
GENERAL
MEBT RAFT 2 ASSEMBLY

MICROFILMED: | DWG. TYPE: ASSEM | SHOWN ON: 25B603 | SCALE: 33/100 | DO NOT SCALE PRINTS
SHEET 4 OF 4
PATENT CLEAR: | DESIGN ACCT. NO.: - | CATEGORY CODE: FE3330 | DWG. NO.: 25B6116 | SIZE: A | REV.: A

DWG. NO. 25B6116 | A | 4