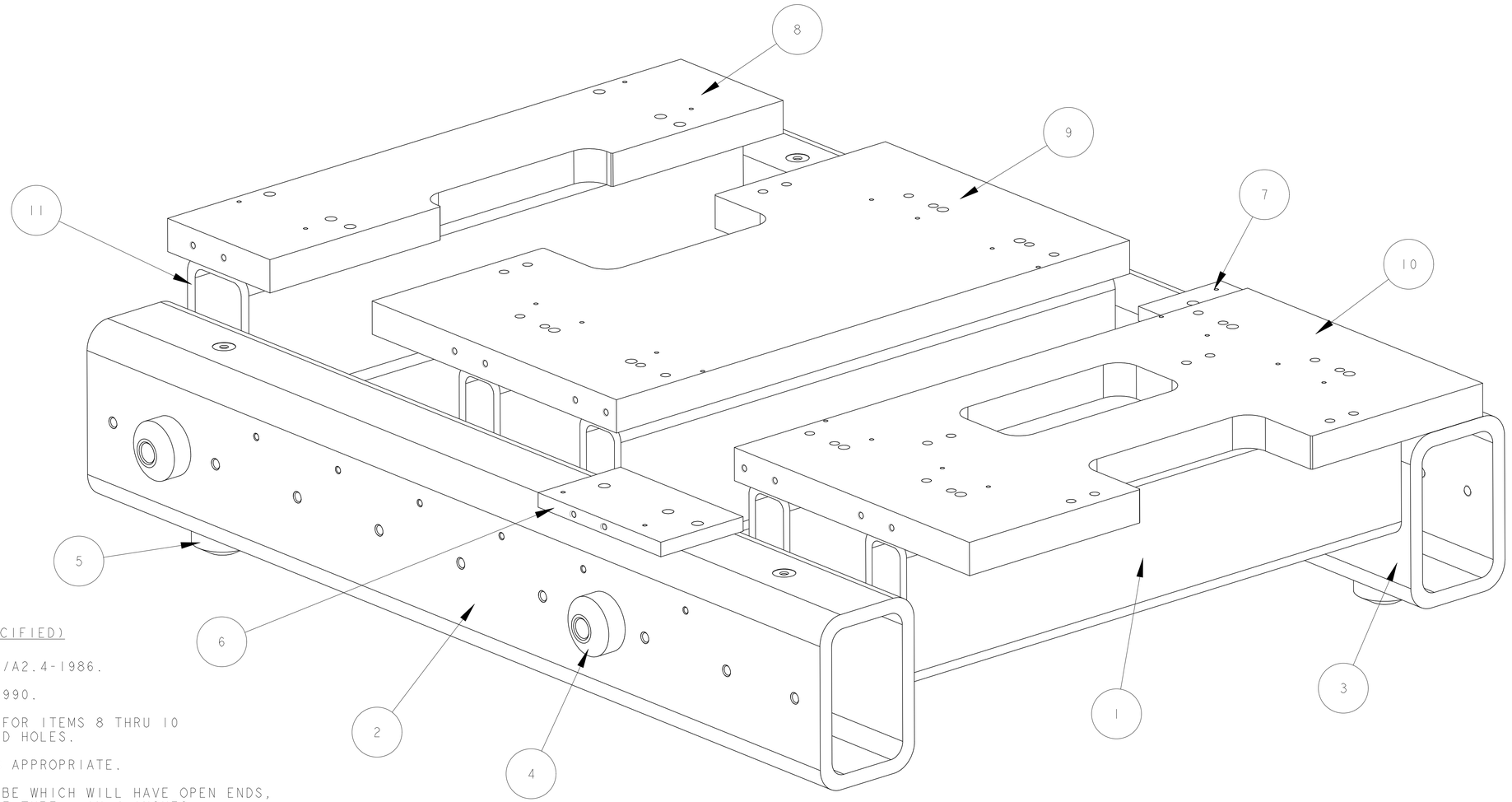

NOTES: (UNLESS OTHERWISE SPECIFIED)

1. ALL WELD SYMBOLS PER ANSI/AWS/A2.4-1986.
2. ALL WELDS PER ANSI/AWS/D1.1-1990.
3. SAW OR FLAME-CUT PERMISSIBLE FOR ITEMS 8 THRU 10 EXCEPT FOR TAPPED AND MACHINED HOLES.
4. BEAD BLAST AND STEAM CLEAN AS APPROPRIATE.
5. FOR ANY 6" x 4" RETANGULAR TUBE WHICH WILL HAVE OPEN ENDS, REMOVE EXCESS WELD FROM INSIDE TUBE - IN 4 INCHES.
6. USE OF 1/8" DIAMETER ROD AS A FILLER FOR ALL FLARE BEVEL WELDS IS PERMISSIBLE.
7. STRESS RELIEVE ENTIRE STRUCTURE AFTER ALL WELDING.
8. **SURFACE TREATMENT PRIOR TO FINISH MACHINING:**
   - A) CLEAN ALL SURFACES NOT TO BE SUBSEQUENTLY MACHINED BY ABRASIVE BLASTING (USING FINE GLASS BEADS) TO A MINIMUM SSPC SP-10 (SA2 1/2) NEAR-WHITE BLAST.
   - B) PLUG ALL REAMED AND TAPPED HOLES.
   - C) ALL SURFACES TO BE FREE OF BURRS, CHIPS, SCALE, SLAG, RUST, DIRT, OIL AND GREASE.
9. **SURFACE TREATMENT AFTER FINISH MACHINING:**
   - A) **PLATING:** ELECTROLESS NICKEL PLATE ENTIRE WELDMENT, ACCORDING TO MIL-C26074E, TO A THICKNESS OF .0005 MIN. / .001 MAX.
   - B) PLUG ALL REAMED AND TAPPED HOLES.
10. APPROXIMATE WEIGHT = 514 lb.

SCALE 1/2

ITEM	PART NO	REQD	DESCRIPTION	MATERIAL
11	25B455-11	1	TUBING, RECT 5" x 3" x 3/8" WALL STL ASTM A-500	CARBON STEEL
10	25B455-10	1	PLATE, 21.86" x 11.50" x 1.20" AISI 1015-1025 STEEL PLATE	CARBON STEEL
9	25B455-9	1	PLATE, 21.86" x 11.95" x 1.20" AISI 1015-1025 STEEL PLATE	CARBON STEEL
8	25B455-8	1	PLATE, 21.86" x 5.00" x 1.20" AISI 1015-1025 STEEL PLATE	CARBON STEEL
7	25B455-7	1	PLATE, 6" x 3 9/16" x 9/16" AISI 1015-1025 STEEL PLATE	CARBON STEEL
6	25B455-6	1	PLATE, 6" x 3 9/16" x 9/16" AISI 1015-1025 STEEL PLATE	CARBON STEEL
5	25B455-5	3	BAR, ROUND 2" DIA x 1 3/4" LG STL ASTM A108	CARBON STEEL
4	25B455-4	3	BAR, ROUND 2" DIA x 5 1/2" LG STL ASTM A108	CARBON STEEL
3	25B455-3	1	TUBING, RECT 6" x 4" x 1/2" WALL STL ASTM A-500	CARBON STEEL
2	25B455-2	1	TUBING, RECT 6" x 4" x 1/2" WALL STL ASTM A-500	CARBON STEEL
1	25B455-1	4	TUBING, RECT 5" x 2" x 5/16" WALL STL ASTM A-500	CARBON STEEL

REV	DWG	CHK	ZONE	DATE	CHANGES
C	AD			5/23/01	CHANGE 2 1/2" x 5" x 3/8" WALL RECTANGULAR TUBING TO 2" x 5" x 5/16" WALL (4X) CHANGE 2 1/2" x 5" x 3/8" WALL RECTANGULAR TUBING TO 3" x 5" x 3/8" WALL (1X) OTHER REVISIONS TOO EXTENSIVE TO LIST
B	AD			5/01	CHANGE .400 FROM A BASIC DIMENSION TO ±.010 SHT. 6 OF 7 ADD 5/16-18 HOLES (12X) SHT. 6 OF 7
A	AD			5/01	INITIAL RELEASE

UNLESS OTHERWISE SPECIFIED

PROJECTION:

TOLERANCES: X.X ± 0.1 | FRAC. ± 1/64 | X.XX ± 0.03 | Angles ± 1.0° | X.XXX ± 0.010 | FINISH 125

DO NOT SCALE PRINT

THREADS ARE CLASS 2
CHAMFER ENDS OF ALL SCREW TREADS 30°
CUT ROUND, 1.5 THREAD RELIEF ON MACHINED THREADS
BREAK EDGES .016 MAX. ON MACHINED WORK
REMOVE BURRS, WELD SPLATTER & LOOSE SCALE
IN ACCORDANCE WITH ASME Y14.5M & B46.1

SHOP ORDERS

SER NO.	-		
ACCT NO.		NO. REQD	
DATE ISSD	-		
DEL TO		DATE REQD	-
SURFACE TREATMT	-		
IDENT METHOD	TAG		
PROJECT NUMBER	N/A		
PROJECT NAME	N/A		
DWG BY	Allan DeMello	DATE	18-Apr-01
CHK BY	D. Oshatz	DATE	
APR BY	D. Oshatz	DATE	

ERNEST ORLANDO LAWRENCE BERKELEY NATIONAL LABORATORY
UNIVERSITY OF CALIFORNIA - BERKELEY

SNS - FES MEBT
MECHANICAL SUB-SYSTEMS - RAFT SYSTEMS
RAFT #3 WELDMENT ASSEMBLY

MICROFILMED:	DWG. TYPE	SHOWN ON	SCALE: 1/2	DO NOT SCALE PRINTS
	ASSEM	25B452	SHEET 1 OF 7	
PATENT CLEAR:	DESIGN ACCT. NO.	CATEGORY CODE	DWG. NO. 25B4554	SIZE C	REV.
	-	FE3313		

Dwg. File: 25B455_Work1.dft; 2/16/05

Dwg. 7703780.2 A-5/16/01

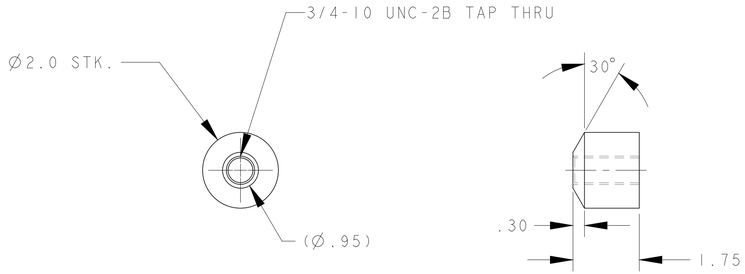

SCALE 1/2

ITEM 5

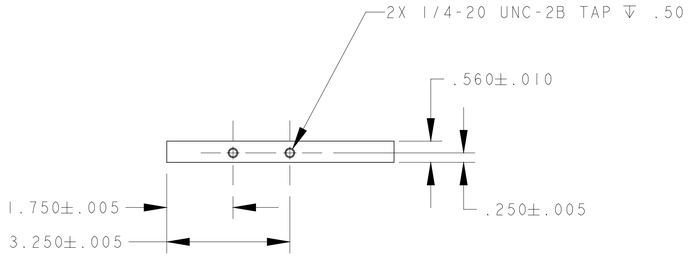

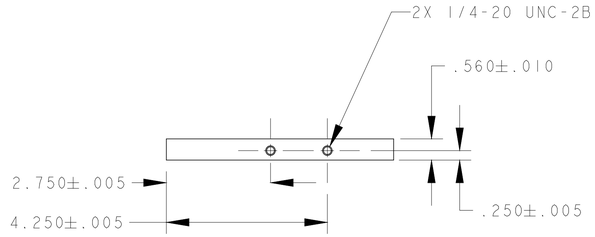

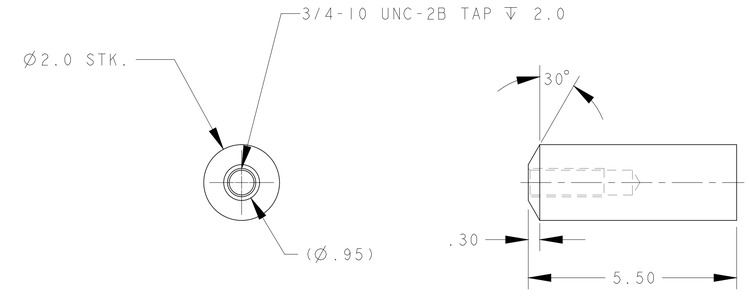

SCALE 1/2

ITEM 4

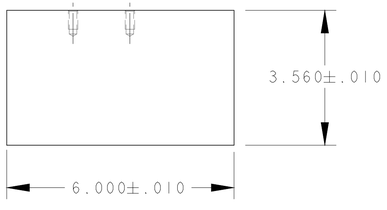

SCALE 1/2

ITEM 6

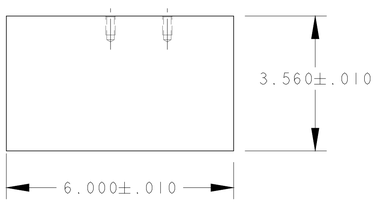

SCALE 1/2

ITEM 7

REV	DWG	CHK	ZONE	DATE	CHANGES
C	AD			5/23/01	SEE SHEET 1 OF 7
B	AD			5/01	SEE SHEET 1 OF 7
A	AD			5/01	INITIAL RELEASE

UNLESS OTHERWISE SPECIFIED

PROJECTION:

TOLERANCES: X.X ± 0.1 | FRAC. ± 1/64; X.XX ± 0.03 | Angles ± 1.0°; X.XXX ± 0.010 | FINISH 125

DO NOT SCALE PRINT

THREADS ARE CLASS 2

CHAMFER ENDS OF ALL SCREW TREADS 30°

CUT ROUND, 1.5 THREAD RELIEF ON MACHINED THREADS

BREAK EDGES .016 MAX. ON MACHINED WORK

REMOVE BURRS, WELD SPLATTER & LOOSE SCALE

IN ACCORDANCE WITH ASME Y14.5M & B46.1

SHOP ORDERS

ACCT NO.	NO. REQD	DATE ISSD	SER NO. -
DEL TO		DATE REQD	-
SURFACE TREATMT	-		
IDENT METHOD	TAG		
PROJECT NUMBER	N/A		
PROJECT NAME	N/A		
DWG BY	Allan DeMello	DATE	18-Apr-01
CHK BY	D. Oshatz	DATE	
APR BY	D. Oshatz	DATE	

ERNEST ORLANDO LAWRENCE BERKELEY NATIONAL LABORATORY
UNIVERSITY OF CALIFORNIA - BERKELEY

SNS - FES MEBT
MECHANICAL SUB-SYSTEMS - RAFT SYSTEMS
RAFT #3 WELDMENT ASSEMBLY

MICROFILMED:	DWG. TYPE	SHOWN ON	SCALE: 1/2	DO NOT SCALE PRINTS
	ASSEM	25B452	SHEET 2 OF 7	
PATENT CLEAR:	DESIGN ACCT. NO.	CATEGORY CODE	DWG. NO.	SIZE / REV.
	-	FE3313	25B4554	C

Dwg. File: 25B455_Mech1_File: 25B455

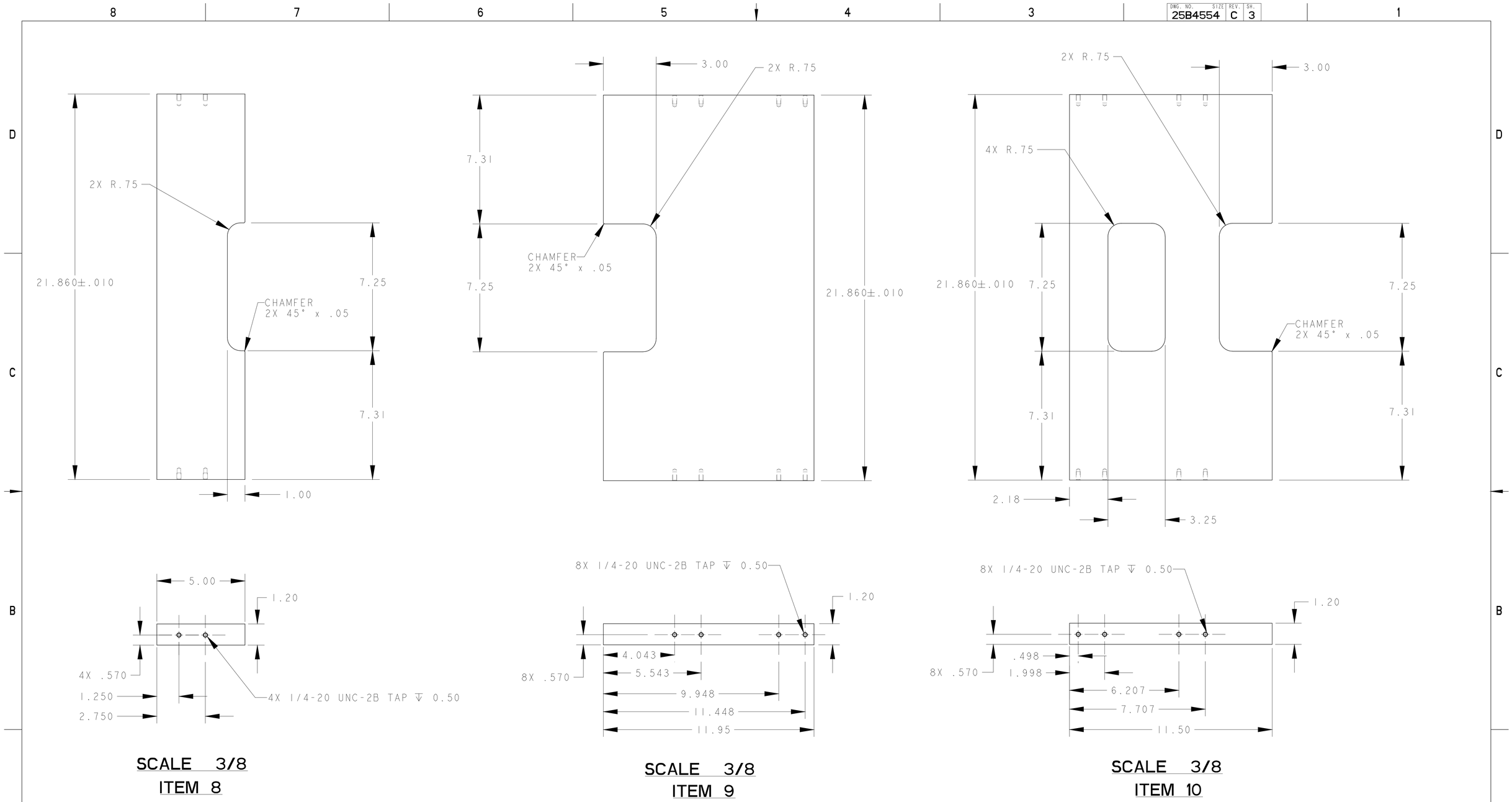

REV	DWG	CHK	ZONE	DATE	CHANGES
C	AD			5/23/01	SEE SHEET 1 OF 7
B	AD			5/01	SEE SHEET 1 OF 7
A	AD			5/01	INITIAL RELEASE

UNLESS OTHERWISE SPECIFIED
PROJECTION:
TOLERANCES: X.X ± 0.1 | FRAC. ± 1/64 | X.XX ± 0.03 | Angles ± 1.0° | X.XXX ± 0.010 | FINISH 125
DO NOT SCALE PRINT
THREADS ARE CLASS 2
CHAMFER ENDS OF ALL SCREW TREADS 30°
CUT ROUND, 1.5 THREAD RELIEF ON MACHINED THREADS
BREAK EDGES .016 MAX. ON MACHINED WORK
REMOVE BURRS, WELD SPLATTER & LOOSE SCALE
IN ACCORDANCE WITH ASME Y14.5M & B46.1

SHOP ORDERS
SER NO. -
ACCT NO. | NO. REQD | DATE ISSD -
DEL TO | DATE REQD -
SURFACE TREATMT -
IDENT METHOD TAG
PROJECT NUMBER N/A
PROJECT NAME N/A
DWG BY Allan DeMello | DATE 11-Apr-01
CHK BY D. Oshatz | DATE
APR BY D. Oshatz | DATE

ERNEST ORLANDO LAWRENCE
BERKELEY NATIONAL LABORATORY
UNIVERSITY OF CALIFORNIA - BERKELEY

SNS - FES MEBT
MECHANICAL SUB-SYSTEMS - RAFT SYSTEMS
RAFT #3 WELDMENT ASSEMBLY

MICROFILMED:
DWG. TYPE: ASSEM
SHOWN ON: 25B452
SCALE: 3/8
DO NOT SCALE PRINTS
SHEET 3 OF 7
PATENT CLEAR:
DESIGN ACCT. NO.: -
CATEGORY CODE: FE3313
DWG. NO. 25B4554 SIZE C REV.

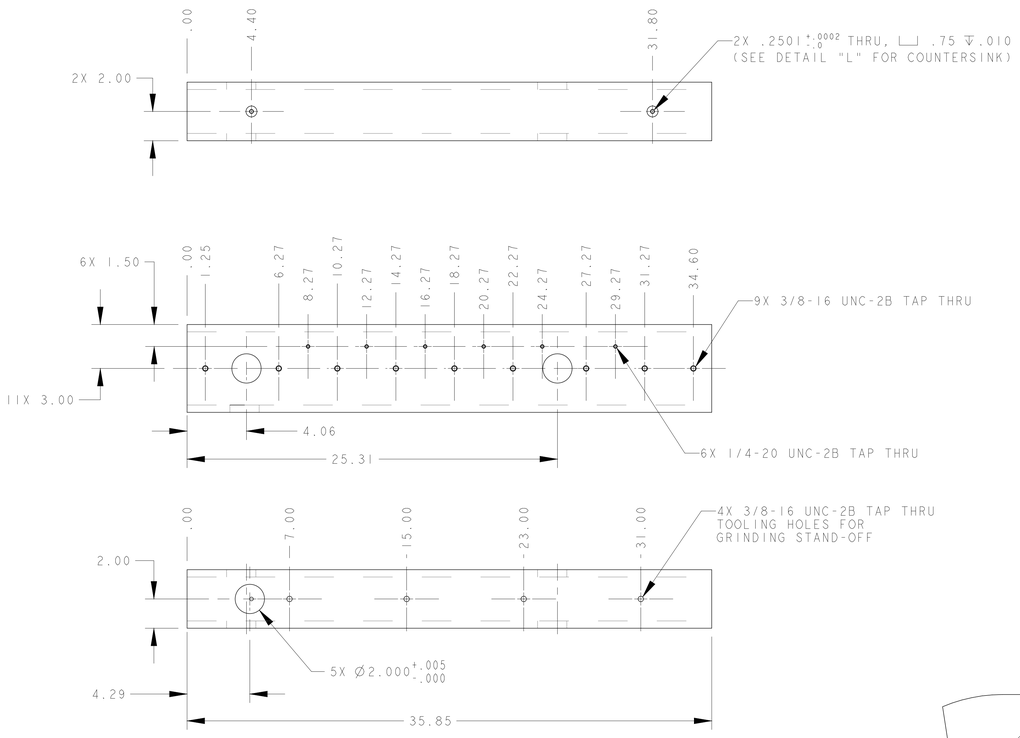

SCALE 1/4
ITEM 2

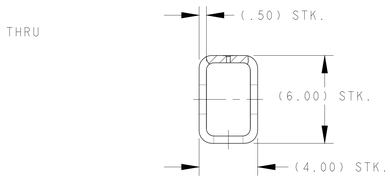

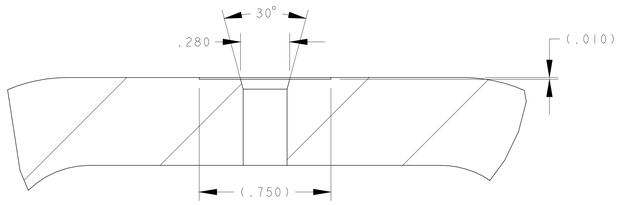

DETAIL L
SCALE 3/1

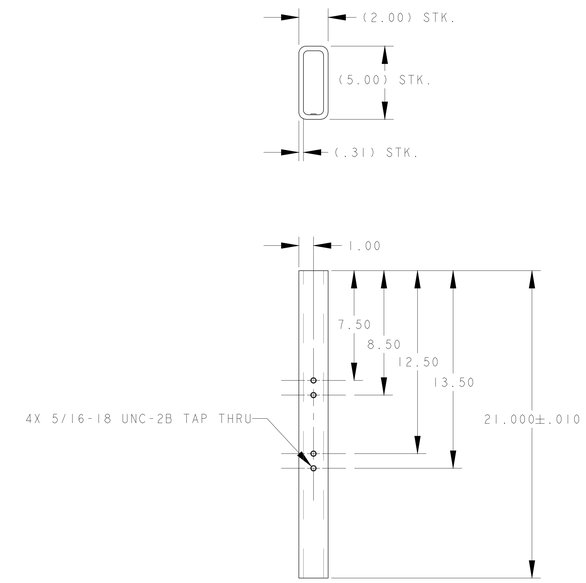

SCALE 1/4
ITEM 1

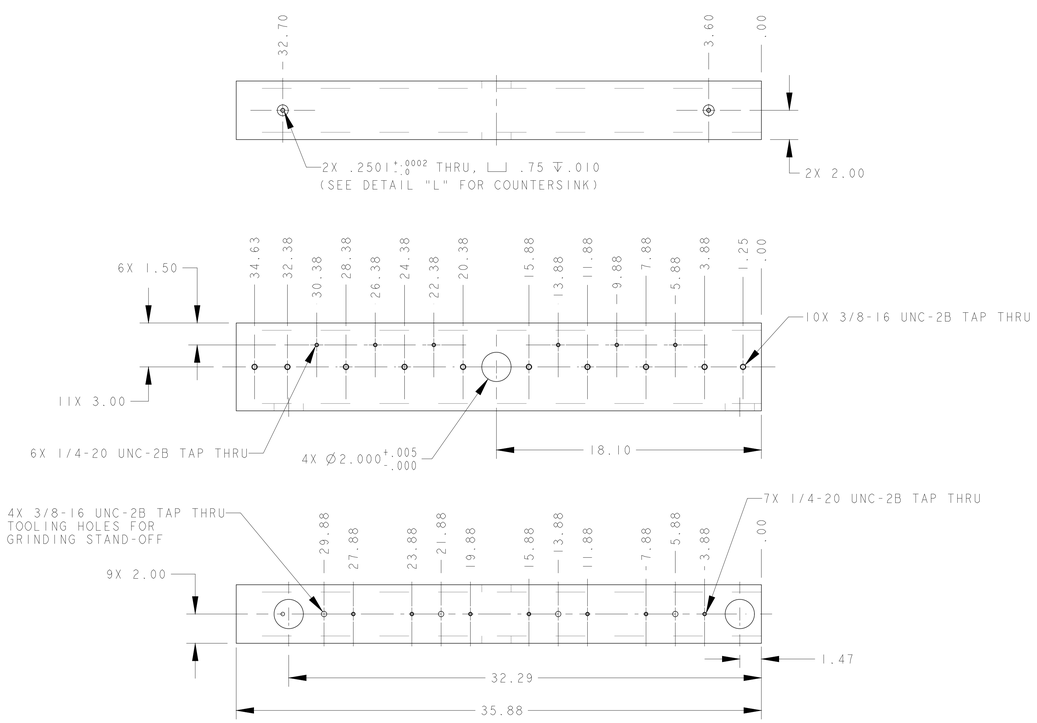

SCALE 1/4
ITEM 3

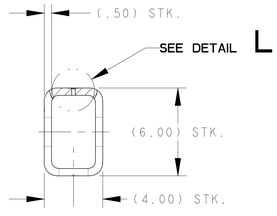

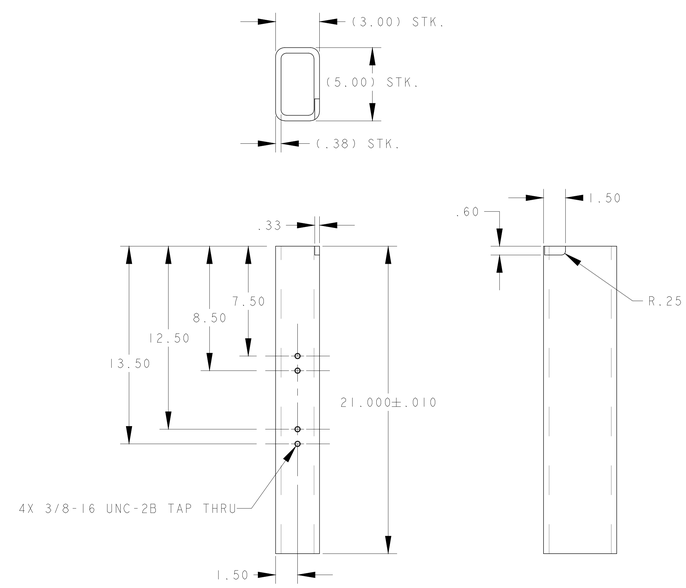

SCALE 1/4
ITEM 12

REV	DWG	CHK	ZONE	DATE	CHANGES
C	AD			5/23/01	SEE SHEET 1 OF 7
B	AD			5/01	SEE SHEET 1 OF 7
A	AD			5/01	INITIAL RELEASE

UNLESS OTHERWISE SPECIFIED
PROJECTION:
TOLERANCES: X.X ± 0.1 FRAC. ± 1/64; X.XX ± 0.03 Angles ± 1.0°; X.XXX ± 0.010 FINISH 125
DO NOT SCALE PRINT
THREADS ARE CLASS 2
CHAMFER ENDS OF ALL SCREW THREADS 30°
CUT ROUND, 1.5 THREAD RELIEF ON MACHINED THREADS
BREAK EDGES .016 MAX. ON MACHINED WORK
REMOVE BURRS, WELD SPLATTER & LOOSE SCALE
IN ACCORDANCE WITH ASME Y14.5M & B46.1

SHOP ORDERS
ACCT NO. / NO. REQD / SER NO. / DATE ISSD
DEL TO / DATE REQD
SURFACE TREATMT
IDENT METHOD TAG
PROJECT NUMBER N/A
PROJECT NAME N/A
DWG BY Allan DeMello DATE 18-Apr-01
CHK BY D. Oshatz DATE
APR BY D. Oshatz DATE

ERNEST ORLANDO LAWRENCE
BERKELEY NATIONAL LABORATORY
UNIVERSITY OF CALIFORNIA - BERKELEY
SNS - FES MEBT
MECHANICAL SUB-SYSTEMS - RAFT SYSTEMS
RAFT #3 WELDMENT ASSEMBLY

MICROFILMED: DWG. TYPE ASSEM | SHOWN ON 25B452 | SCALE: 1/4 | DO NOT SCALE PRINTS
SHEET 4 OF 7
PATENT CLEAR: DESIGN ACCT. NO. - | CATEGORY CODE FE3313 | DWG. NO. 25B4556 | SIZE C | REV. C

DWG. NO. 25B4556 SIZE C REV. 4

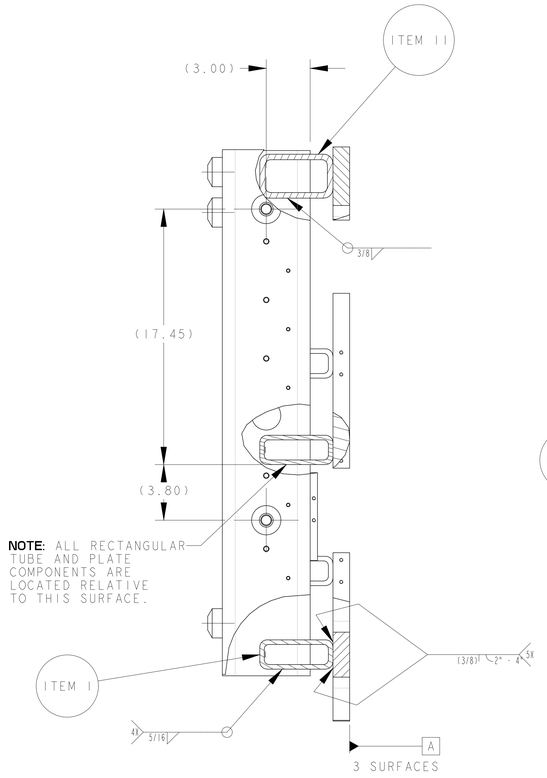

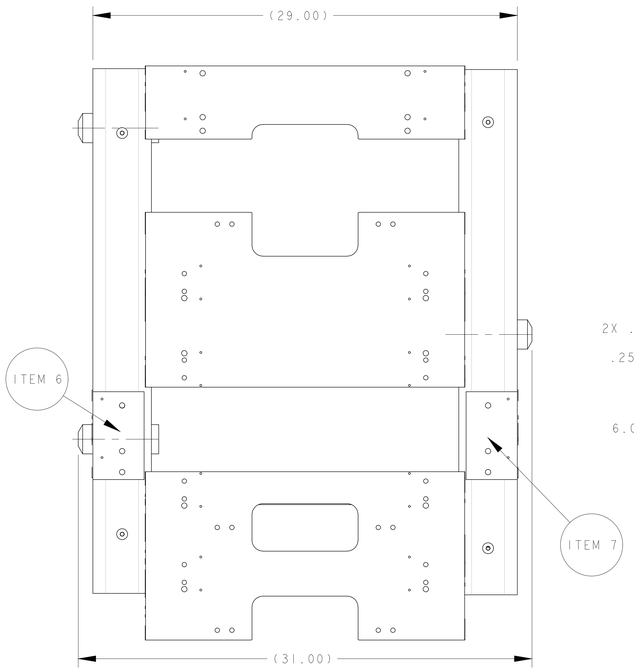

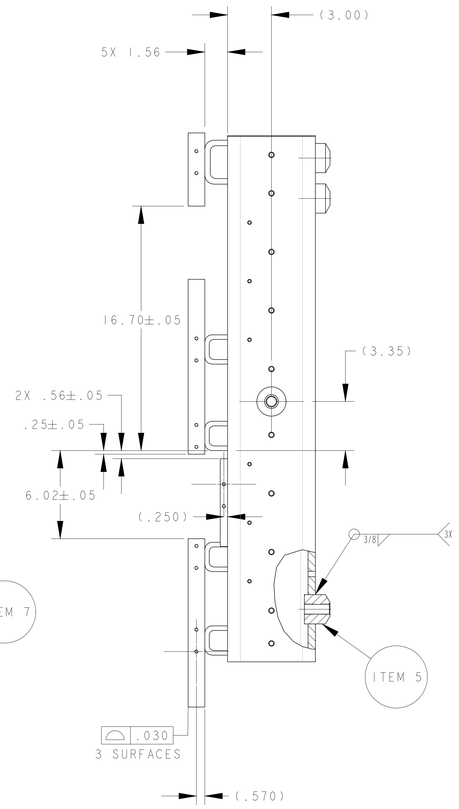

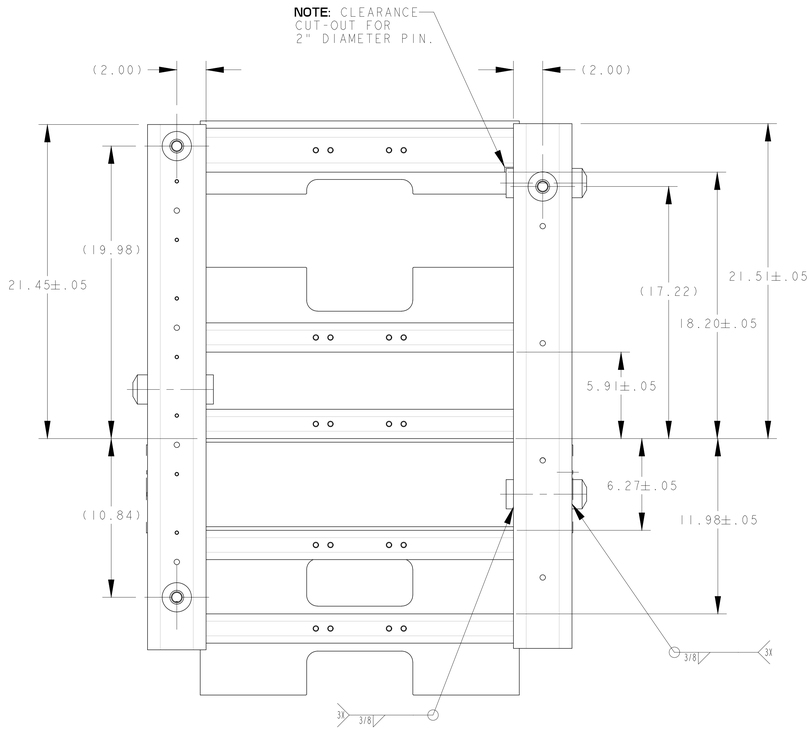

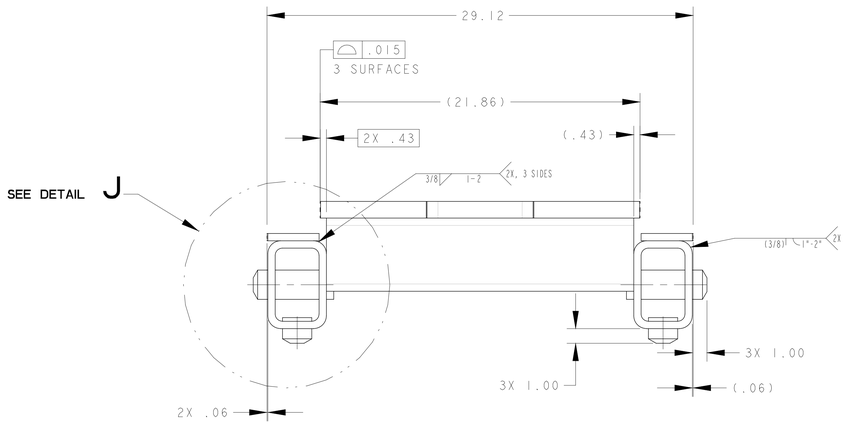

SCALE 1/4

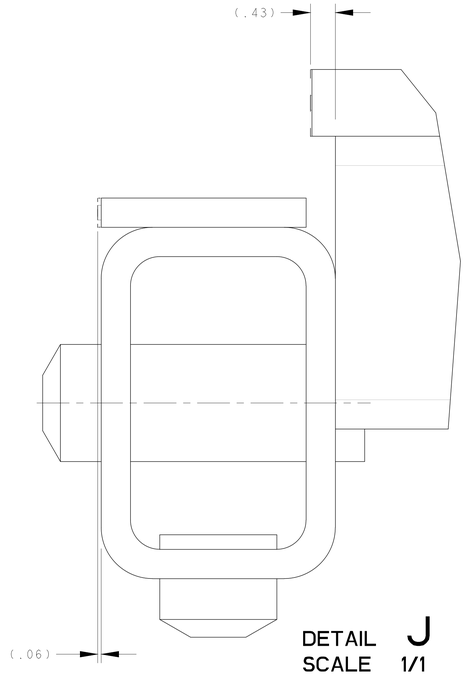

DETAIL J
SCALE 1/1

C	AD		5/23/01	SEE SHEET 1 OF 7			
B	AD		5/01	SEE SHEET 1 OF 7			
A	AD		5/01	INITIAL RELEASE			
REV	DWG	CHK	ZONE	DATE	CHANGES		

UNLESS OTHERWISE SPECIFIED
PROJECTION:
TOLERANCES: X.X ± 0.1 FRAC. ± 1/64; X.XX ± 0.03 Angles ± 1.0°; X.XXX ± 0.010 FINISH 125
DO NOT SCALE PRINT
THREADS ARE CLASS 2
CHAMFER ENDS OF ALL SCREW THREADS 30°
CUT ROUND, 1.5 THREAD RELIEF ON MACHINED THREADS
BREAK EDGES .016 MAX. ON MACHINED WORK
REMOVE BURRS, WELD SPLATTER & LOOSE SCALE
IN ACCORDANCE WITH ASME Y14.5M & B46.1

SHOP ORDERS
ACCT NO. / REQD
DEL TO
SURFACE TREATMENT
IDENT METHOD: TAG
PROJECT NUMBER: N/A
PROJECT NAME: N/A
DWN BY: Allan DeMello — DATE: 18-Apr-01
CHK'D BY: D. Oshatz — DATE:
APP'D BY: D. Oshatz — DATE:
SER NO. / REQD
ISSD DATE / REQD

ERNEST ORLANDO LAWRENCE BERKELEY NATIONAL LABORATORY
UNIVERSITY OF CALIFORNIA · BERKELEY

SNS - FES MEBT
MECHANICAL SUB-SYSTEMS - RAFT SYSTEMS
RAFT #3 WELDMENT ASSEMBLY

MICROFILMED:
DWG. TYPE: ASSEM
SHOWN ON: 25B452
SCALE: 1/1
DO NOT SCALE PRINT
SHEET 5 OF 7
PATENT CLEAR:
DESIGN ACCT. NO.: -
CATEGORY CODE: FE3313
DWG. NO.: 25B4556
SIZE: C
REV.:

DWG. NO. 25B4556 SIZE C SH. 5

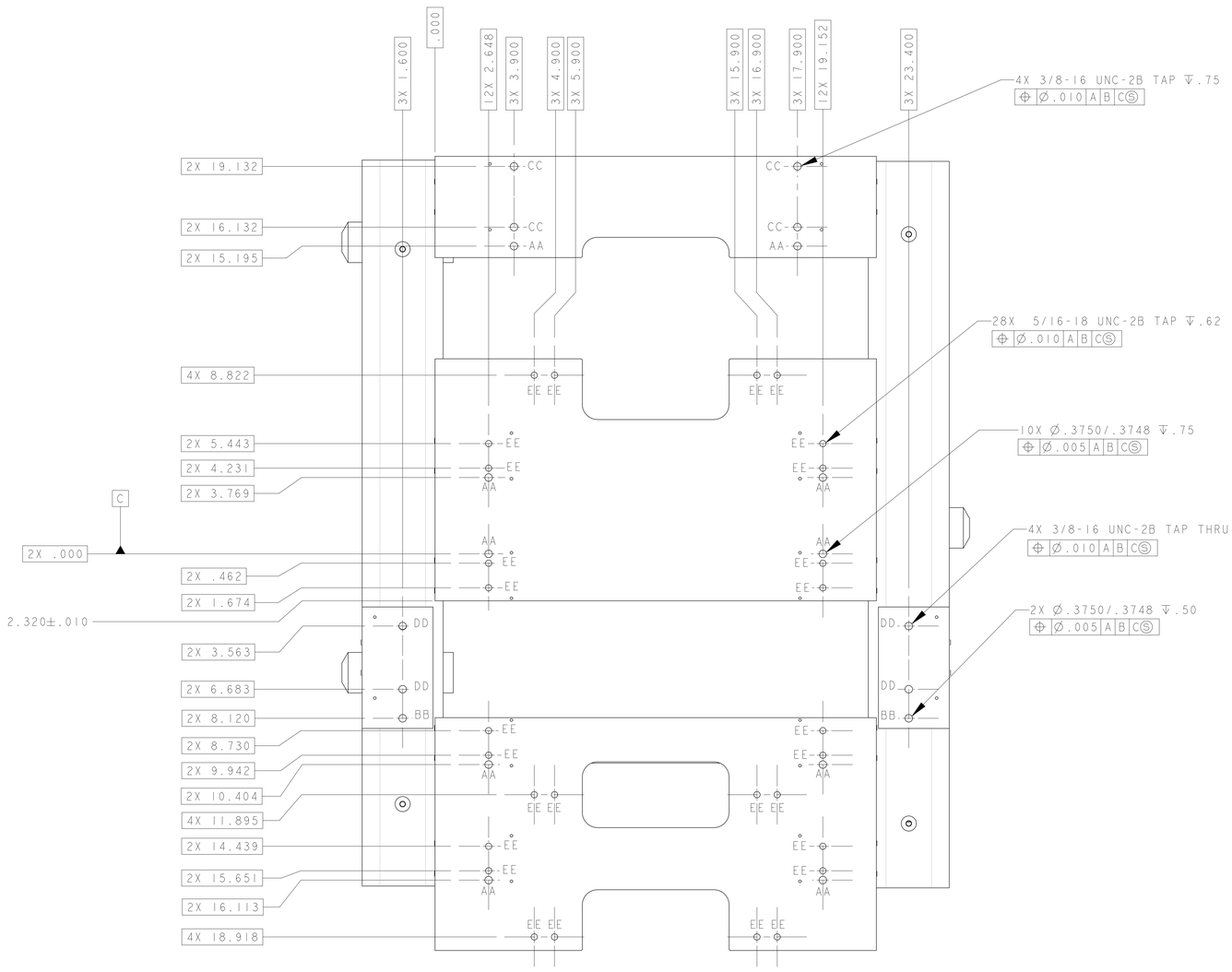

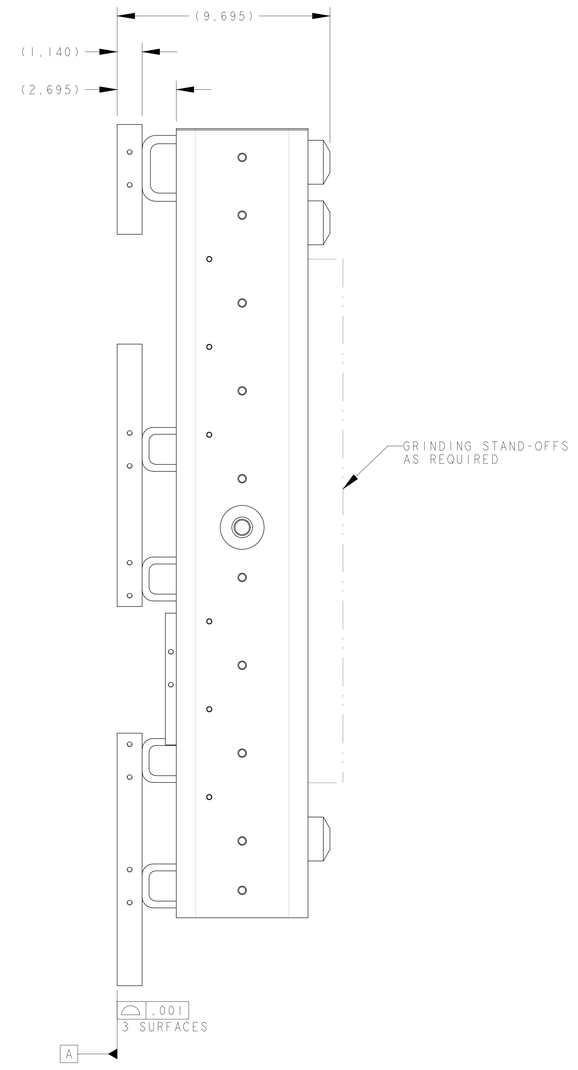

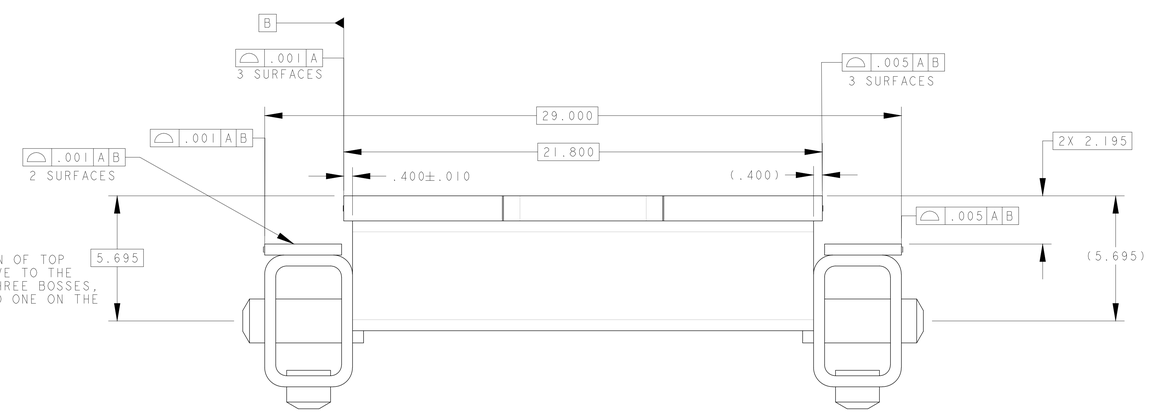

NOTE: FINAL DIMENSION OF TOP SURFACES ARE RELATIVE TO THE CENTERLINE OF THE THREE BOSSES, TWO ON THIS SIDE AND ONE ON THE OTHER SIDE.

FINAL MACHINING

NOTE: AFTER MACHINING SIDES OF ITEMS 6,7,8,9 AND 10 REMOVE ANY BURRS FROM TAPPED HOLES.

HOLE DESCRIPTIONS

HOLE	DESCRIPTION (FOR REFERANCE ONLY)
AA	Ø.3750/.3748 ↧ .75
BB	Ø.3750/.3748 ↧ .50
CC	3/8-16 UNC-2B ↧ .75
DD	3/8-16 UNC-2B ↧ THRU
EE	5/16-18 UNC-2B ↧.62

SCALE 3/8

REV	DWG	CHK	ZONE	DATE	CHANGES
C	AD			5/23/01	SEE SHEET 1 OF 7
B	AD			5/01	SEE SHEET 1 OF 7
A	AD			5/01	INITIAL RELEASE

UNLESS OTHERWISE SPECIFIED
PROJECTION:
TOLERANCES: X.X ± 0.1 FRAC. ± 1/64; X.XX ± 0.03 Angles ± 1.0°; X.XXX ± 0.010 FINISH 125
DO NOT SCALE PRINT
THREADS ARE CLASS 2
CHAMFER ENDS OF ALL SCREW THEADS 30°
CUT ROUND, 1.5 THREAD RELIEF ON MACHINED THREADS
BREAK EDGES .016 MAX. ON MACHINED WORK
REMOVE BURRS, WELD SPLATTER & LOOSE SCALE
IN ACCORDANCE WITH ASME Y14.5M & B46.1

SHOP ORDERS
SER NO. -
ACCT NO. | NO. REQD | DATE ISSD -
DEL TO | DATE REQD -
SURFACE TREATMT -
IDENT METHOD TAG
PROJECT NUMBER N/A
PROJECT NAME N/A
DWG BY Allan DeMello DATE 13-Apr-01
CHK BY D. Oshatz DATE
APR BY D. Oshatz DATE

ERNEST ORLANDO LAWRENCE BERKELEY NATIONAL LABORATORY
UNIVERSITY OF CALIFORNIA - BERKELEY

SNS - FES MEBT
MECHANICAL SUB-SYSTEMS - RAFT SYSTEMS
RAFT #3 WELDMENT ASSEMBLY

MICROFILMED: | DWG. TYPE ASSEM | SHOWN ON 25B452 | SCALE: 3/8 | DO NOT SCALE PRINTS
SHEET 6 OF 7
PATENT CLEAR: | DESIGN ACCT. NO. - | CATEGORY CODE FE3313 | DWG. NO. 25B4556 | SIZE C | REV. C

DWG. NO. 25B4556 SIZE C REV. 6

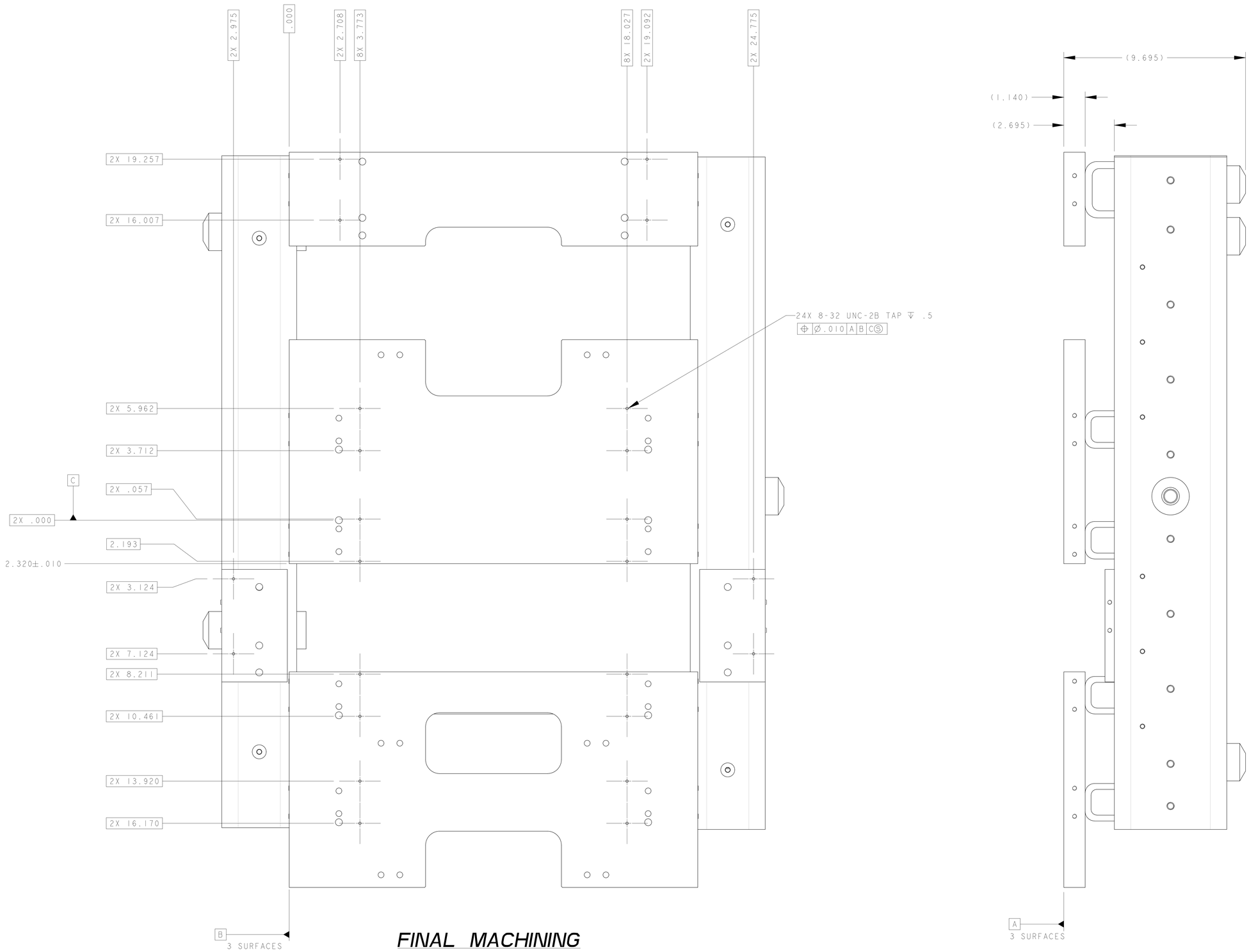

FINAL MACHINING

EXTRA VIEW FOR CLARITY

SCALE 1/2

REV	DWG	CHK	ZONE	DATE	CHANGES
C	AD			5/23/01	SEE SHEET 1 OF 7
B	AD			5/01	SEE SHEET 1 OF 7
A	AD			5/01	INITIAL RELEASE

UNLESS OTHERWISE SPECIFIED
PROJECTION:
TOLERANCES: X.X ± 0.1 | FRAC. ± 1/64 | X.XX ± 0.03 | Angles ± 1.0° | X.XXX ± 0.010 | FINISH 125
DO NOT SCALE PRINT
THREADS ARE CLASS 2
CHAMFER ENDS OF ALL SCREW TREADS 30°
CUT ROUND, 1.5 THREAD RELIEF ON MACHINED THREADS
BREAK EDGES .016 MAX. ON MACHINED WORK
REMOVE BURRS, WELD SPLATTER & LOOSE SCALE
IN ACCORDANCE WITH ASME Y14.5M & B46.1

SHOP ORDERS
ACCT NO. | NO. REQD | SER NO. - | DATE - | ISSD - | DATE - | REQD -
DEL TO
SURFACE TREATMT -
IDENT METHOD TAG
PROJECT NUMBER N/A
PROJECT NAME N/A
DWG BY Allan DeMello | DATE 25-Apr-01
CHK BY D. Oshatz | DATE
APR BY D. Oshatz | DATE

ERNEST ORLANDO LAWRENCE
BERKELEY NATIONAL LABORATORY
UNIVERSITY OF CALIFORNIA - BERKELEY

SNS - FES MEBT
MECHANICAL SUB-SYSTEMS - RAFT SYSTEMS
RAFT #3 WELDMENT ASSEMBLY

MICROFILMED: | DWG. TYPE ASSEM | SHOWN ON 25B452 | SCALE: 1/2 | DO NOT SCALE PRINTS
SHEET 7 OF 7
PATENT CLEAR: | DESIGN ACCT. NO. - | CATEGORY CODE FE3313 | DWG. NO. 25B4556 | SIZE | REV. C

DWG. NO. 25B4556 | SIZE C | REV. 7

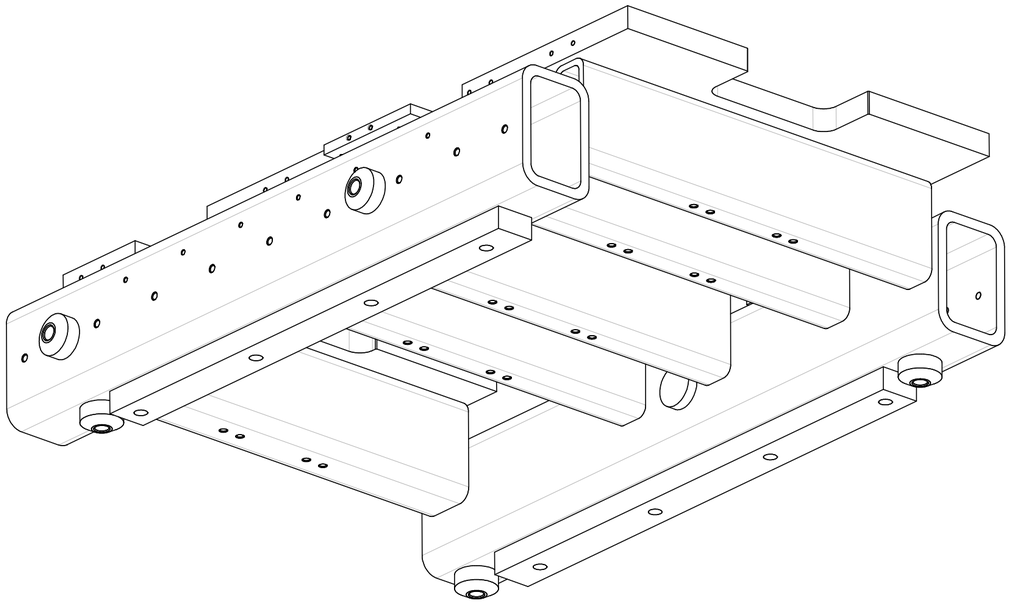

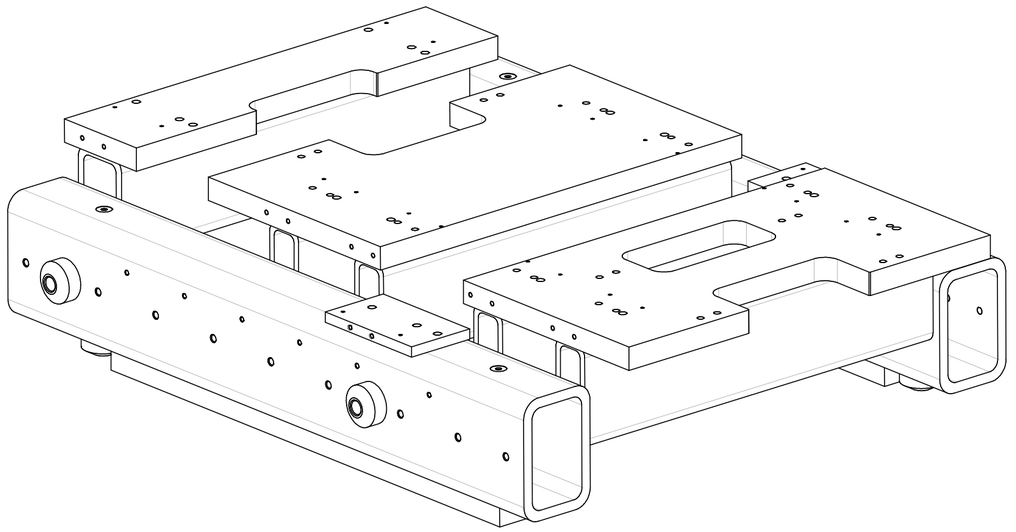

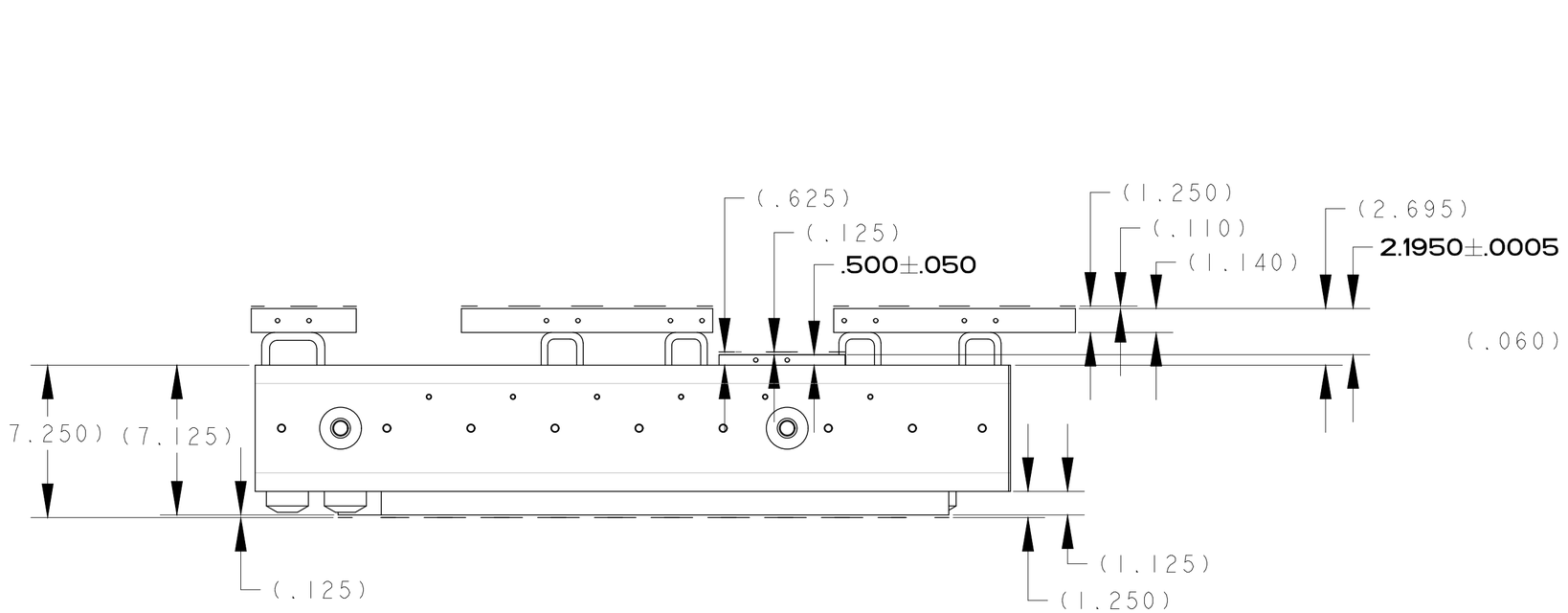

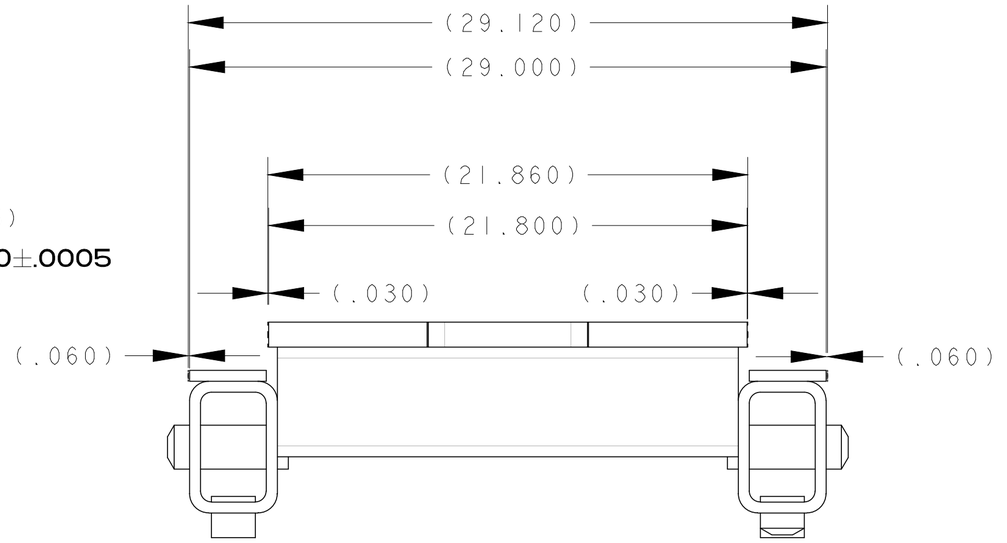

25B455 GRINDING REFERENCE DRAWING
SCALE 3/16

FOR RAFT #3 (25B455)

25B455 GRINDING STAND-OFF REFERENCE DRAWING
SCALE 1/4

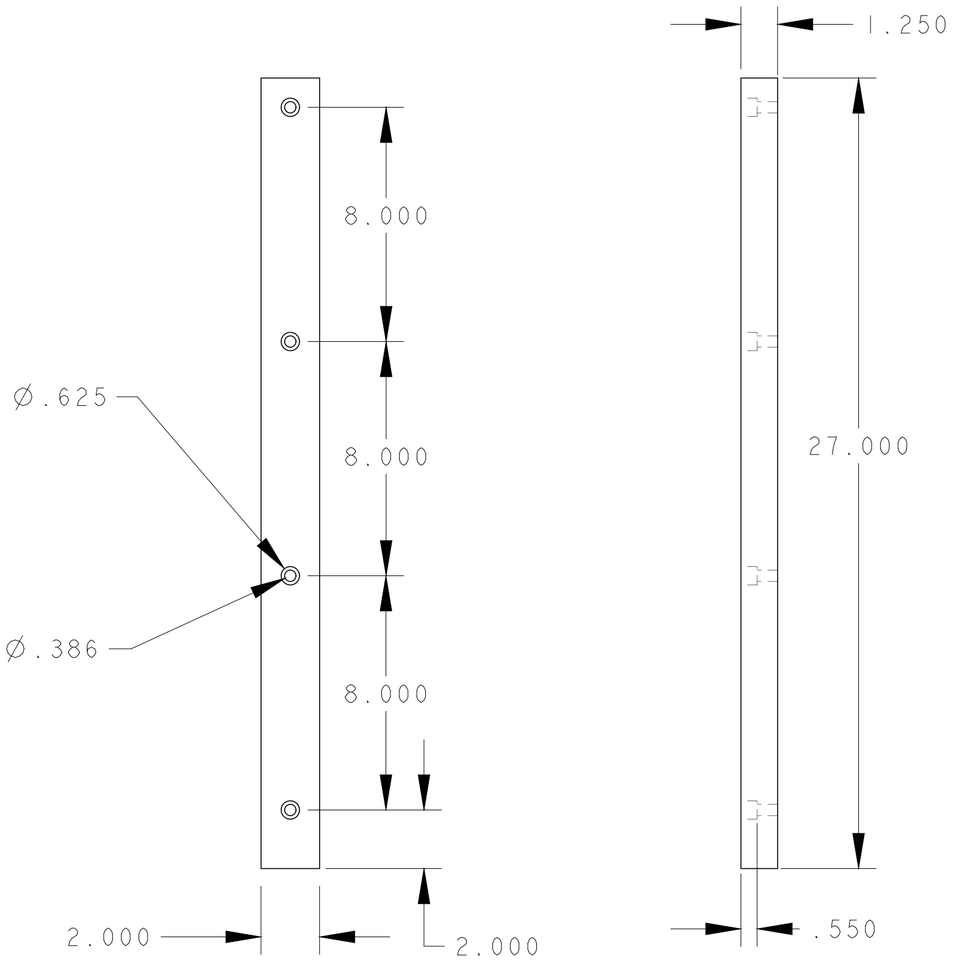

NOTE: 2 required
MARK ON SIDE "R3 L" and "R3 R"