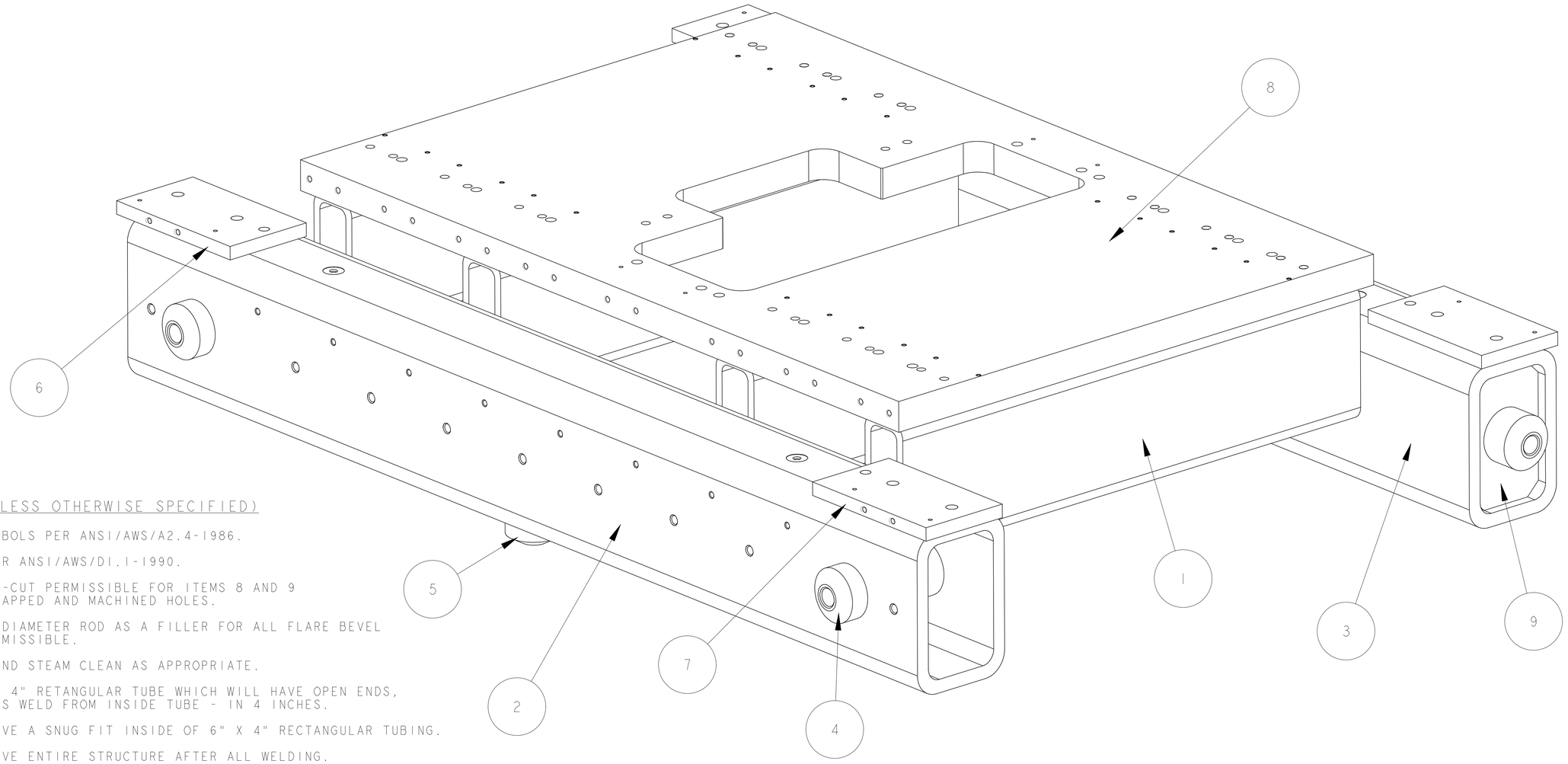

NOTES: (UNLESS OTHERWISE SPECIFIED)

1. ALL WELD SYMBOLS PER ANSI/AWS/A2.4-1986.
2. ALL WELDS PER ANSI/AWS/D1.1-1990.
3. SAW OR FLAME-CUT PERMISSIBLE FOR ITEMS 8 AND 9 EXCEPT FOR TAPPED AND MACHINED HOLES.
4. USE OF 1/8" DIAMETER ROD AS A FILLER FOR ALL FLARE BEVEL WELDS IS PERMISSIBLE.
5. BEAD BLAST AND STEAM CLEAN AS APPROPRIATE.
6. FOR ANY 6" x 4" RETANGULAR TUBE WHICH WILL HAVE OPEN ENDS, REMOVE EXCESS WELD FROM INSIDE TUBE - IN 4 INCHES.
7. ITEM 9 TO HAVE A SNUG FIT INSIDE OF 6" X 4" RECTANGULAR TUBING.
8. STRESS RELIEVE ENTIRE STRUCTURE AFTER ALL WELDING.
9. **SURFACE TREATMENT PRIOR TO FINISH MACHINING:**
   - A) CLEAN ALL SURFACES NOT TO BE SUBSEQUENTLY MACHINED BY ABRASIVE BLASTING (USING FINE GLASS BEADS) TO A MINIMUM SSPC SP-10 (SA2 1/2) NEAR-WHITE BLAST.
   - B) PLUG ALL REAMED AND TAPPED HOLES.
   - C) ALL SURFACES TO BE FREE OF BURRS, CHIPS, SCALE, SLAG, RUST, DIRT, OIL AND GREASE.
10. **SURFACE TREATMENT AFTER FINISH MACHINING:**
   - A) **PLATING:** ELECTROLESS NICKEL PLATE ENTIRE WELDMENT, ACCORDING TO MIL-C26074E, TO A THICKNESS OF .0005 MIN. / .001 MAX.
   - B) PLUG ALL REAMED AND TAPPED HOLES.

11. APPROXIMATE WEIGHT = 548 lb.

SCALE 1/2

ITEM	PART NO	REQD	DESCRIPTION	MATERIAL
9	25B454-9	2	BAR, RECTANGULAR 3"x 5"x 2" STL ASTM A108	CARBON STEEL
8	25B454-8	1	PLATE, 21.86" x 31.63" x 1.20" AISI 1015-1025 STEEL PLATE	CARBON STEEL
7	25B454-7	2	PLATE, 6" x 3 9/16" x 9/16" AISI 1015-1025 STEEL PLATE	CARBON STEEL
6	25B454-6	2	PLATE, 6" x 3 9/16" x 9/16" AISI 1015-1025 STEEL PLATE	CARBON STEEL
5	25B454-5	1	BAR, ROUND 2" DIA x 1 3/4" LG STL ASTM A108	CARBON STEEL
4	25B454-4	5	BAR, ROUND 2" DIA x 5 1/2" LG STL ASTM A108	CARBON STEEL
3	25B454-3	1	TUBING, RECT 6" x 4" x 1/2" WALL STL ASTM A-500	CARBON STEEL
2	25B454-2	1	TUBING, RECT 6" x 4" x 1/2" WALL STL ASTM A-500	CARBON STEEL
1	25B454-1	4	TUBING, RECT 5" x 2 x 5/16" WALL STL ASTM A-500	CARBON STEEL

REV	DWG	CHK	ZONE	DATE	CHANGES
C	AD			5/23/01	CHANGE 2 1/2" x 5" x 3/8" WALL RECTANGULAR TUBING TO 2" x 5" x 5/16" WALL (4X) CHANGE 3/8-16 TAPPED HOLES (4X) TO 5/16-18, ZONE B2, SHT. 4 OF 7 ADD .375 PRECISION HOLES MISSING FROM LEFT SIDE OF PART, SHT. 6 OF 7
B	AD			5/01	CHANGE TOOLING HOLE LOCATIONS SHT. 4 OF 7 ADD 5/16-18 HOLES (4X) SHT. 6 OF 7 ADD .400±.010 DIMENSION SHT. 6 OF 7 ADD .400 REFERENCE DIMENSION SHT. 6 OF 7 ADD 5/16-18 HOLES (12X) SHT. 7 OF 7
A	AD			5/01	INITIAL RELEASE

UNLESS OTHERWISE SPECIFIED
PROJECTION:
TOLERANCES: X.X ± 0.1 FRAC. ± 1/64; X.XX ± 0.03 Angles ± 1.0°; X.XXX ± 0.010 FINISH 125
DO NOT SCALE PRINT
THREADS ARE CLASS 2
CHAMFER ENDS OF ALL SCREW TREADS 30°
CUT ROUND, 1.5 THREAD RELIEF ON MACHINED THREADS
BREAK EDGES .016 MAX. ON MACHINED WORK
REMOVE BURRS, WELD SPLATTER & LOOSE SCALE
IN ACCORDANCE WITH ASME Y14.5M & B46.1

SHOP ORDERS

ACCT NO.	NO. REQD	DATE ISSD	-
DEL TO		DATE REQD	-
SURFACE TREATMT	-		
IDENT METHOD	TAG		
PROJECT NUMBER	N/A		
PROJECT NAME	N/A		
DWG BY	Allan DeMello	DATE	18-Apr-01
CHK BY	D. Oshatz	DATE	
APR BY	D. Oshatz	DATE	

SER NO. -

ERNEST ORLANDO LAWRENCE BERKELEY NATIONAL LABORATORY
UNIVERSITY OF CALIFORNIA - BERKELEY

SNS - FES MEBT
MECHANICAL SUB-SYSTEMS - RAFT SYSTEMS
RAFT #2 WELDMENT ASSEMBLY

MICROFILMED:	DWG. TYPE	SHOWN ON	SCALE: 1/2	DO NOT SCALE PRINTS
	ASSEM	25B451	SHEET 1 OF 7	
PATENT CLEAR:	DESIGN ACCT. NO. -	CATEGORY CODE FE3313	DWG. NO. 25B4544	SIZE C REV.

Dwg. File: 25B454_Mod=1.File: 25B454
Dwg. 7B3780_J_C1B4541

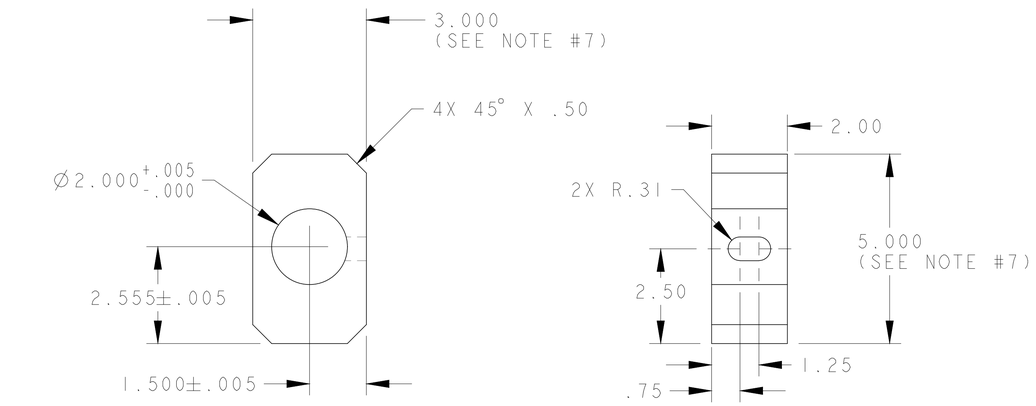

SCALE 1/2
ITEM 9

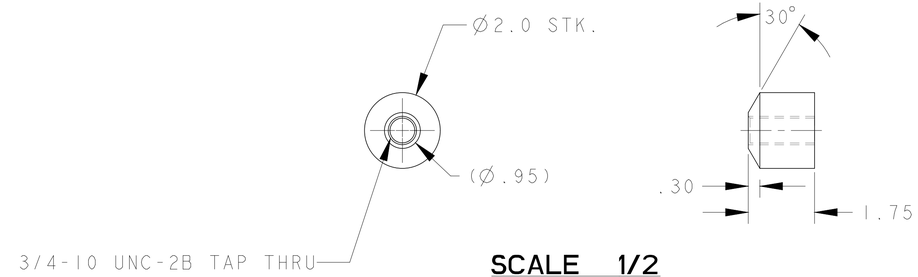

SCALE 1/2
ITEM 5

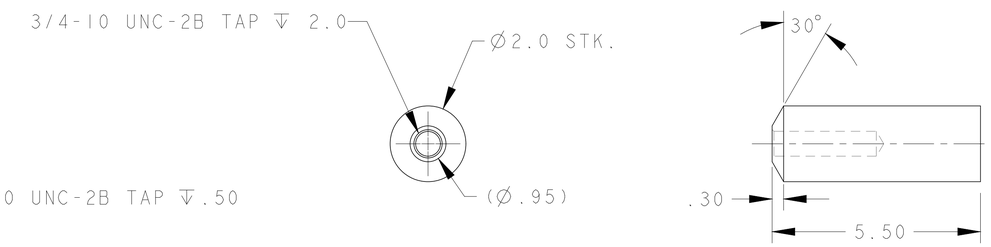

SCALE 1/2
ITEM 4

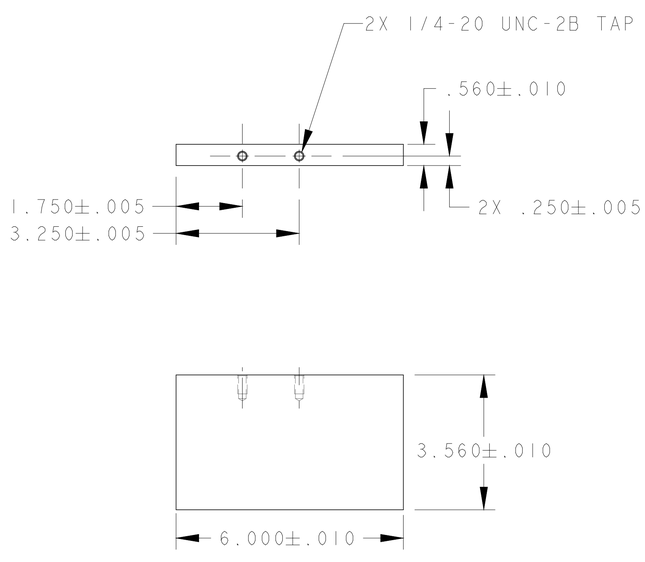

SCALE 1/2
ITEM 6

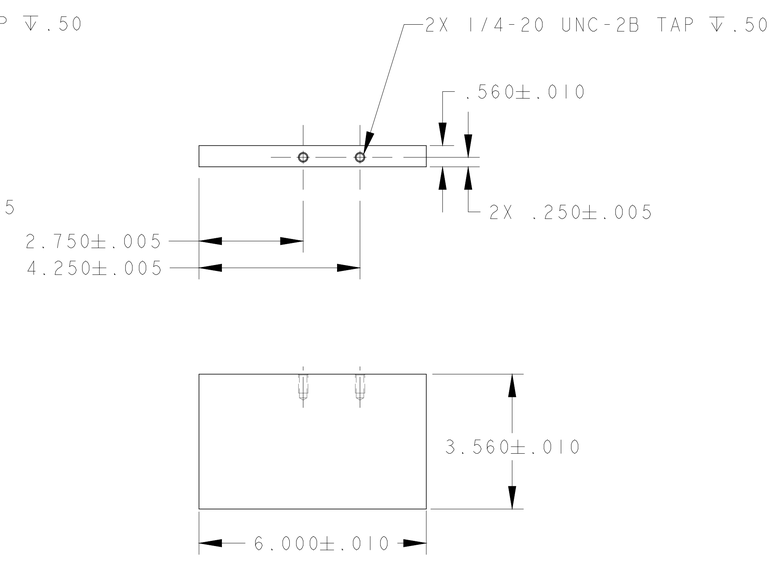

SCALE 1/2
ITEM 7

REV	DWG	CHK	ZONE	DATE	CHANGES
C	AD			5/23/01	SEE SHEET 1 OF 7
B	AD			5/01	SEE SHEET 1 OF 7
A	AD			5/01	INITIAL RELEASE

UNLESS OTHERWISE SPECIFIED
PROJECTION:
TOLERANCES: X.X ± 0.1 FRAC. ± 1/64; X.XX ± 0.03 Angles ± 1.0°; X.XXX ± 0.010 FINISH 125
DO NOT SCALE PRINT
THREADS ARE CLASS 2
CHAMFER ENDS OF ALL SCREW TREADS 30°
CUT ROUND, 1.5 THREAD RELIEF ON MACHINED THREADS
BREAK EDGES .016 MAX. ON MACHINED WORK
REMOVE BURRS, WELD SPLATTER & LOOSE SCALE
IN ACCORDANCE WITH ASME Y14.5M & B46.1

SHOP ORDERS
ACCT NO. / NO. REQD / SER NO. -
DEL TO / DATE ISSD -
DATE REQD. -
SURFACE TREATMT -
IDENT. METHOD TAG
PROJECT NUMBER N/A
PROJECT NAME N/A
DWG BY Allan DeMello DATE 05-Apr-01
CHK BY D. Oshatz DATE
APR BY D. Oshatz DATE

ERNEST ORLANDO LAWRENCE BERKELEY NATIONAL LABORATORY
UNIVERSITY OF CALIFORNIA - BERKELEY

SNS - FES MEBT
MECHANICAL SUB-SYSTEMS - RAFT SYSTEMS
RAFT #2 WELDMENT ASSEMBLY

MICROFILMED:
PATENT CLEAR:
DWG. TYPE: ASSEM
SHOWN ON: 25B451
SCALE: 1/2
DO NOT SCALE PRINTS
SHEET 2 OF 7
DESIGN ACCT. NO.: -
CATEGORY CODE: FE3313
DWG. NO.: 25B4544 SIZE: C REV.:

Dwg. File: 25B454_Mech_File: 25B454

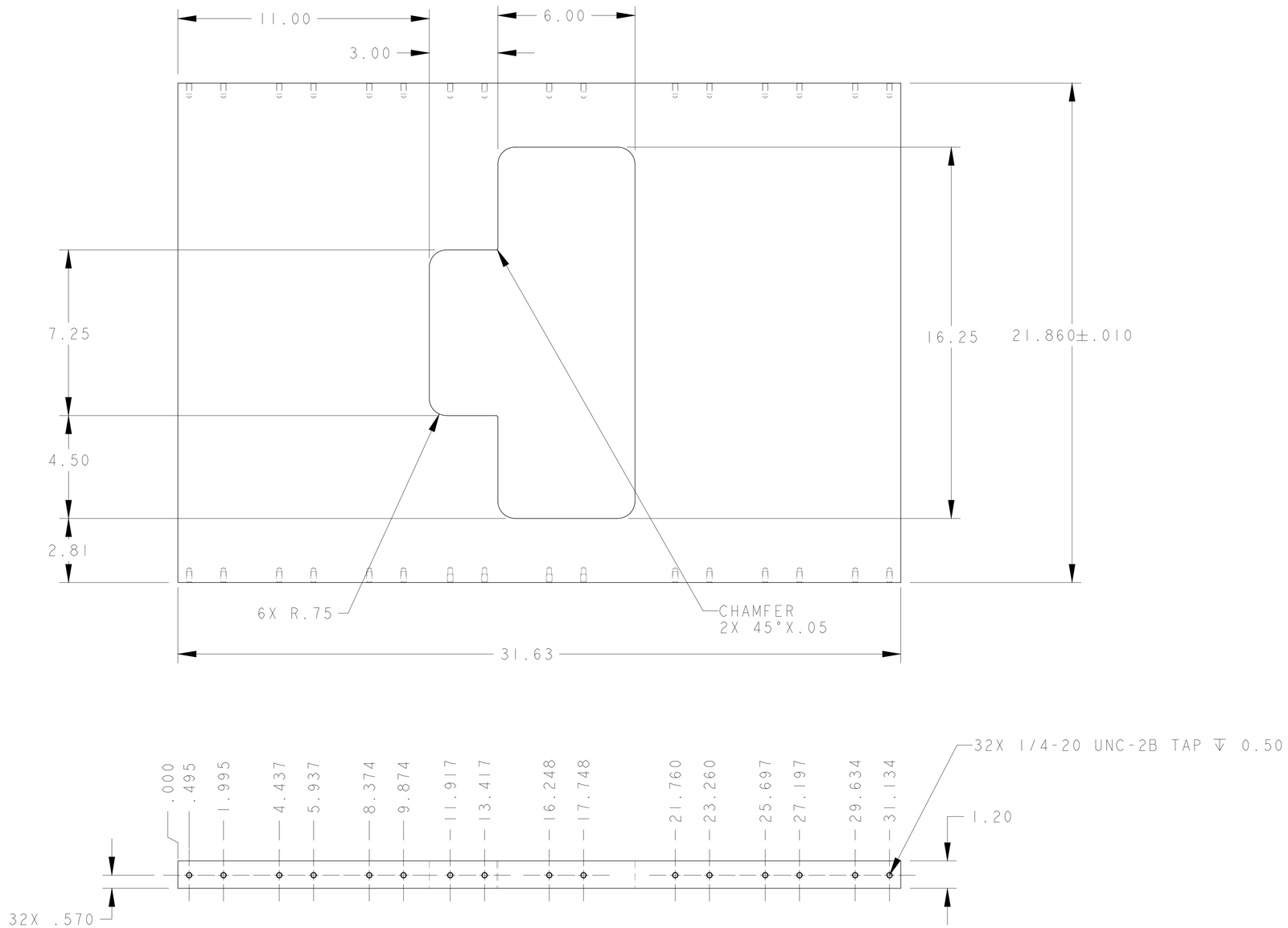

SCALE 3/8

ITEM 8

REV	DWG	CHK	ZONE	DATE	CHANGES
C	AD			5/23/01	SEE SHEET 1 OF 7
B	AD			5/01	SEE SHEET 1 OF 7
A	AD			5/01	INITIAL RELEASE

UNLESS OTHERWISE SPECIFIED
PROJECTION:

TOLERANCES		
	X.X ± 0.1	FRAC. ± 1/64
	X.XX ± 0.03	Angles ± 1.0°
	X.XXX ± 0.010	FINISH 125

DO NOT SCALE PRINT

THREADS ARE CLASS 2
CHAMFER ENDS OF ALL SCREW TREADS 30°
CUT ROUND, 1.5 THREAD RELIEF ON MACHINED THREADS
BREAK EDGES .016 MAX. ON MACHINED WORK
REMOVE BURRS, WELD SPLATTER & LOOSE SCALE
IN ACCORDANCE WITH ASME Y14.5M & B46.1

SHOP ORDERS

ACCT NO.	NO. REQD	DATE ISSD	
DEL TO		DATE REQD	
SURFACE TREATMT			
IDENT METHOD	TAG		
PROJECT NUMBER	N/A		
PROJECT NAME	N/A		
DWG BY	Allan DeMello	DATE	10-Apr-01
CHK BY	D. Oshatz	DATE	
APR BY	D. Oshatz	DATE	

SER NO. -

ERNEST ORLANDO LAWRENCE
BERKELEY NATIONAL LABORATORY
UNIVERSITY OF CALIFORNIA - BERKELEY

SNS - FES MEBT
MECHANICAL SUB-SYSTEMS - RAFT SYSTEMS
RAFT #2 WELDMENT ASSEMBLY

MICROFILMED:	DWG. TYPE	SHOWN ON	SCALE: 3/8	DO NOT SCALE PRINTS
	ASSEM	25B451	SHEET 3 OF 7	
PATENT CLEAR:	DESIGN ACCT. NO.	CATEGORY CODE	DWG. NO.	SIZE / REV.
	-	FE3313	25B4544	C

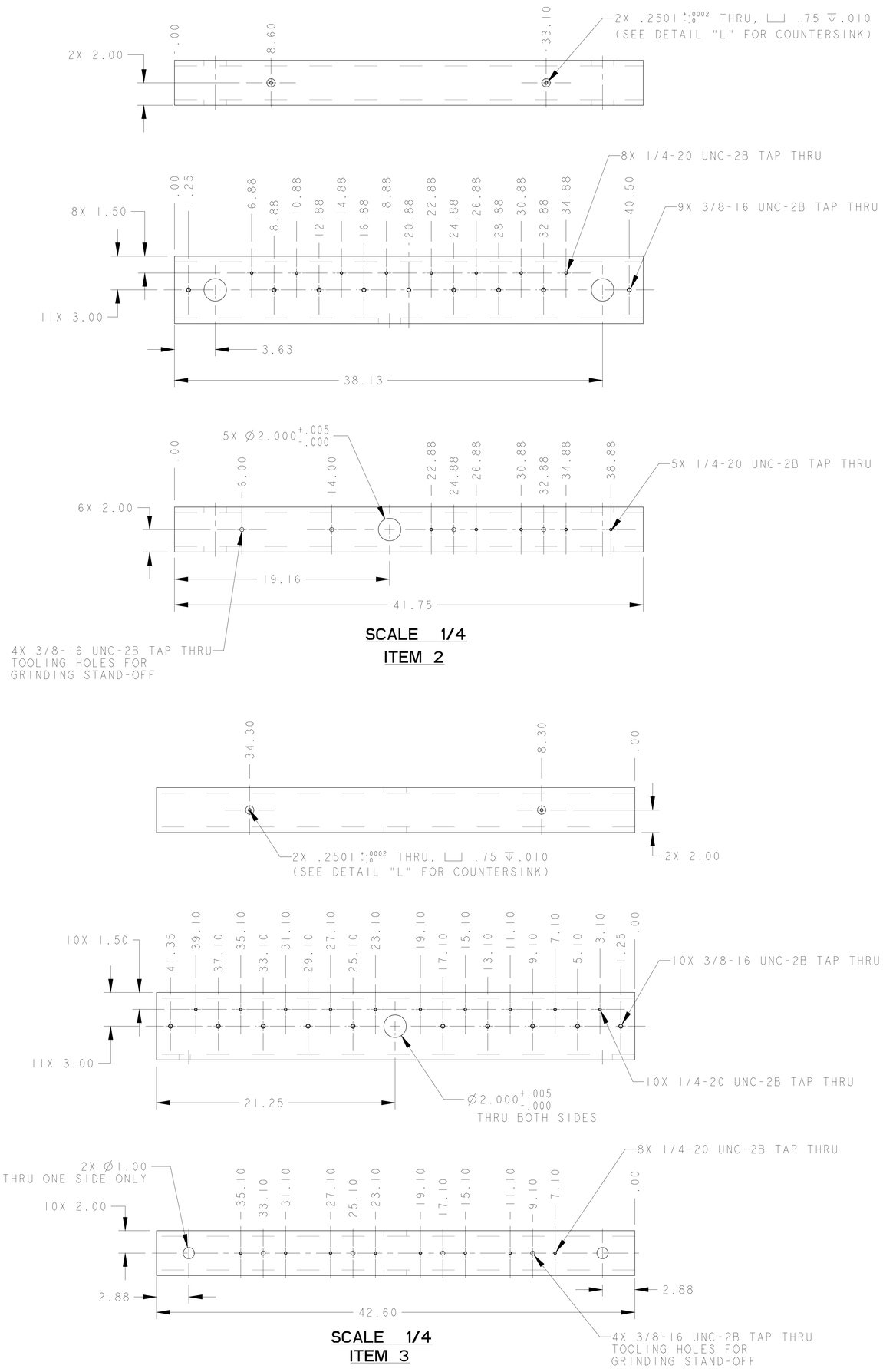

REV	DWG	CHK	ZONE	DATE	CHANGES
C	AD			5/23/01	SEE SHEET 1 OF 7
B	AD			5/01	SEE SHEET 1 OF 7
A	AD			5/01	INITIAL RELEASE

UNLESS OTHERWISE SPECIFIED
PROJECTION:
TOLERANCES: X.X ± 0.1 FRAC. ± 1/64; X.XX ± 0.03 Angles ± 1.0°; X.XXX ± 0.010 FINISH 125
DO NOT SCALE PRINT
THREADS ARE CLASS 2
CHAMFER ENDS OF ALL SCREW TREADS 30°
CUT ROUND, 1.5 THREAD RELIEF ON MACHINED THREADS
BREAK EDGES .016 MAX. ON MACHINED WORK
REMOVE BURRS, WELD SPLATTER & LOOSE SCALE
IN ACCORDANCE WITH ASME Y14.5M & B46.1

SHOP ORDERS
ACCT NO. / NO. REQD. / DATE ISSD
DEL TO / DATE REQD
SURFACE TREATMT
HEAT TREATMT
METHOD: TAG
PROJECT NUMBER: N/A
PROJECT NAME: N/A
DWN By: Allan DeMello — DATE: 22-May-01
CHK By: D. Oshatz — DATE
APR By: D. Oshatz — DATE

ERNEST ORLANDO LAWRENCE BERKELEY NATIONAL LABORATORY
UNIVERSITY OF CALIFORNIA - BERKELEY
SNS - FES MEBT
MECHANICAL SUB-SYSTEMS - RAFT SYSTEMS
RAFT #2 WELDMENT ASSEMBLY

MICROFILMED:	DWG. TYPE	SHOWN ON	SCALE: 1/4	DO NOT SCALE PRINTS
	ASSEM	25B451	SHEET 4 OF 7	
PATENT CLEAR:	DESIGN ACCT. NO.	CATEGORY CODE	DWG. NO.	SIZE / REV.
	-	FE3313	25B4546	C

DWG. NO. 25B4546 C 4

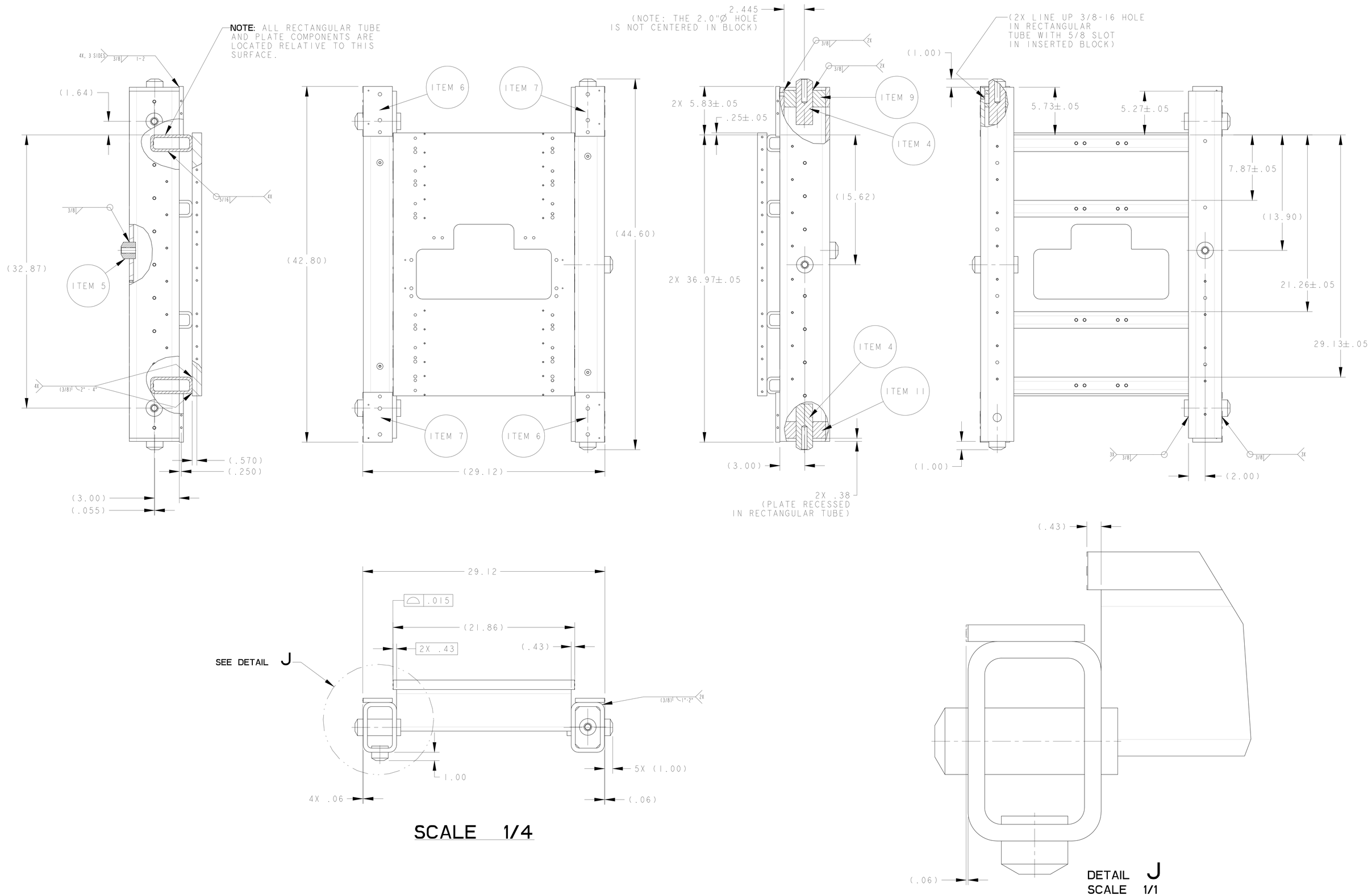

REV	DWG	CHK	ZONE	DATE	CHANGES
C	AD			5/23/01	SEE SHEET 1 OF 7
B	AD			5/01	SEE SHEET 1 OF 7
A	AD			5/01	INITIAL RELEASE

UNLESS OTHERWISE SPECIFIED
PROJECTION:
TOLERANCES: X.X ± 0.1 FRAC. ± 1/64; X.XX ± 0.03 Angles ± 1.0°; X.XXX ± 0.010 FINISH 125/
DO NOT SCALE PRINT
THREADS ARE CLASS 2
CHAMFER ENDS OF ALL SCREW THREADS 30°
CUT ROUND, 1.5 THREAD RELIEF ON MACHINED THREADS
BREAK EDGES .016 MAX. ON MACHINED WORK
REMOVE BURRS, WELD SPLATTER & LOOSE SCALE
IN ACCORDANCE WITH ASME Y14.5M & B46.1

SHOP ORDERS
SUB NO. -
ACCT NO. / NO. REQD / DATE -
DEL NO. / DATE -
TO / REQD -
SURFACE TREATMT -
IDENT METHOD TAG
PROJECT NUMBER N/A
PROJECT NAME N/A
DWN By Allan DeMello DATE 22-May-01
CHK By D. Oshatz DATE
APR By D. Oshatz DATE

ERNEST ORLANDO LAWRENCE BERKELEY NATIONAL LABORATORY
UNIVERSITY OF CALIFORNIA · BERKELEY

SNS - FES MEBT
MECHANICAL SUB-SYSTEMS - RAFT SYSTEMS
RAFT #2 WELDMENT ASSEMBLY

MICROFILMED: | DWG. TYPE ASSEM | SHOWN ON 25B451 | SCALE: 1/1 | DO NOT SCALE PRINTS | SHEET 5 OF 7
PATENT CLEAR: | DESIGN ACCT. NO. - | CATEGORY CODE FE3313 | DWG. NO. 25B4546 | SIZE C | REV.

DWG. NO. 25B4546 | C | 5

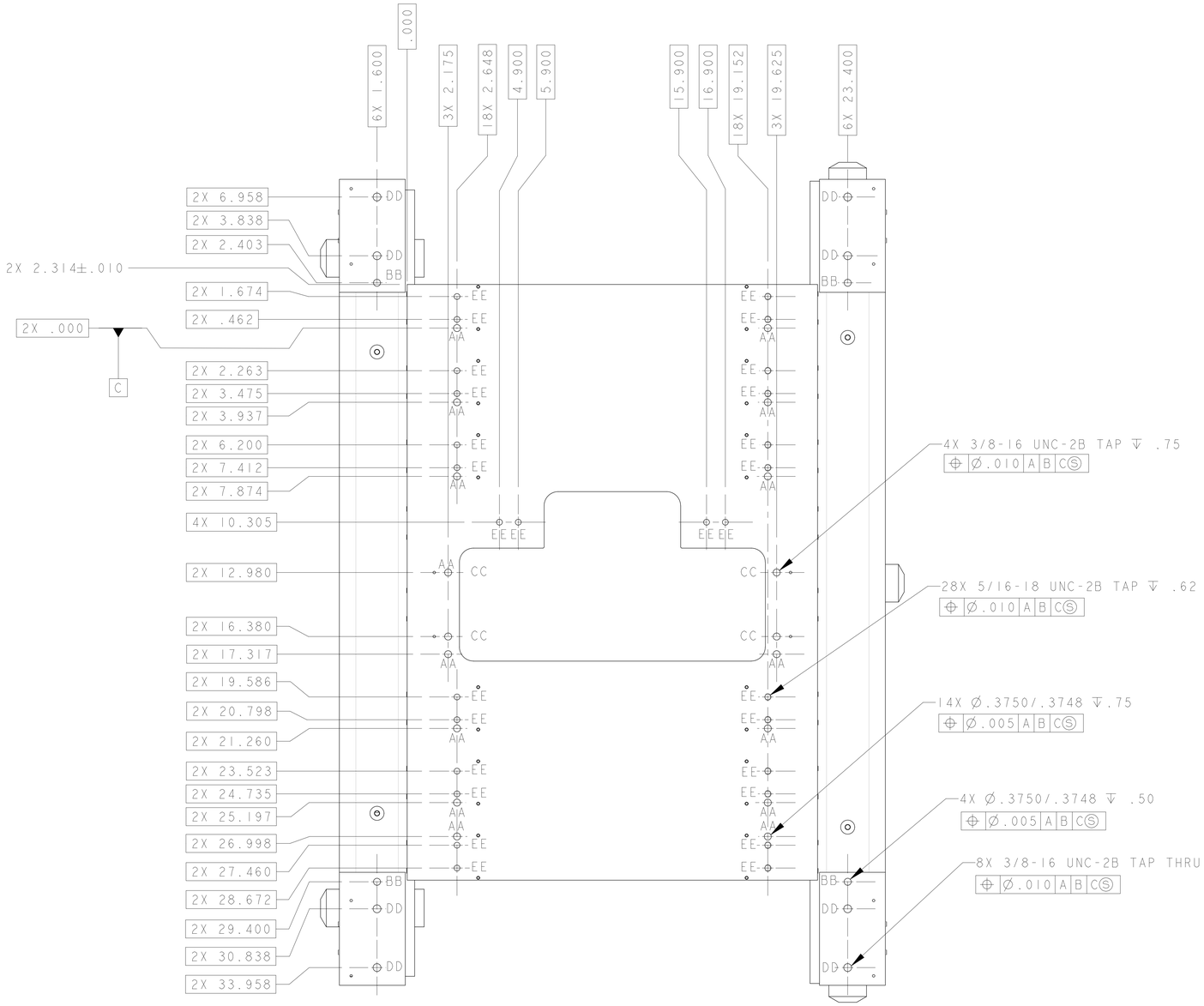

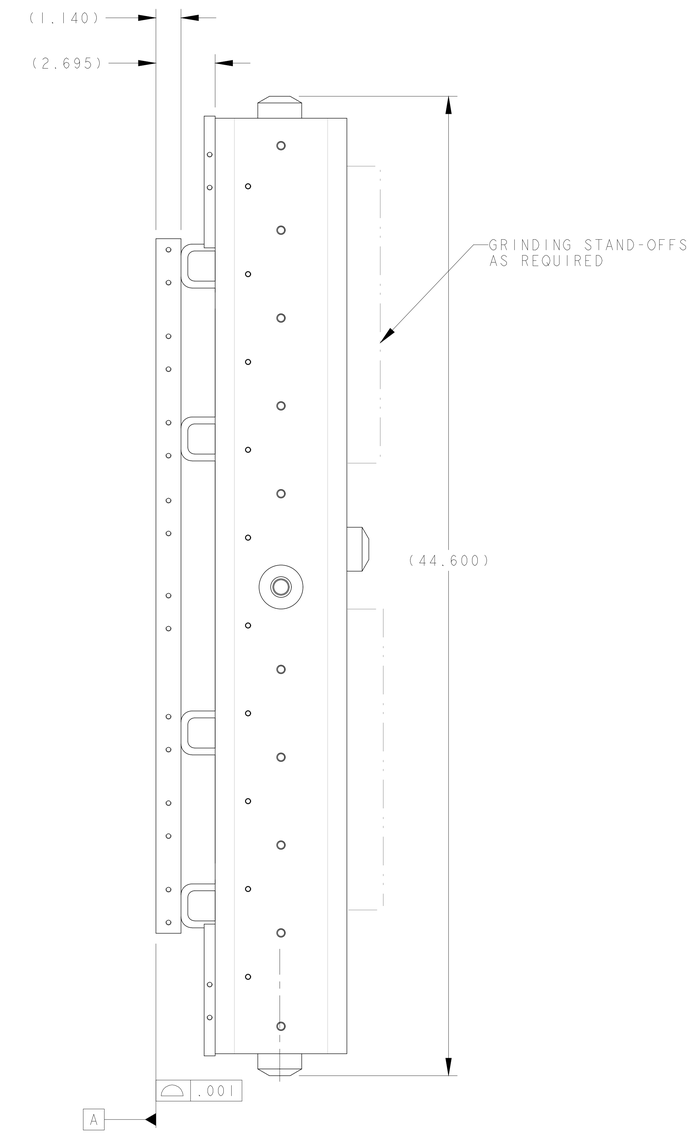

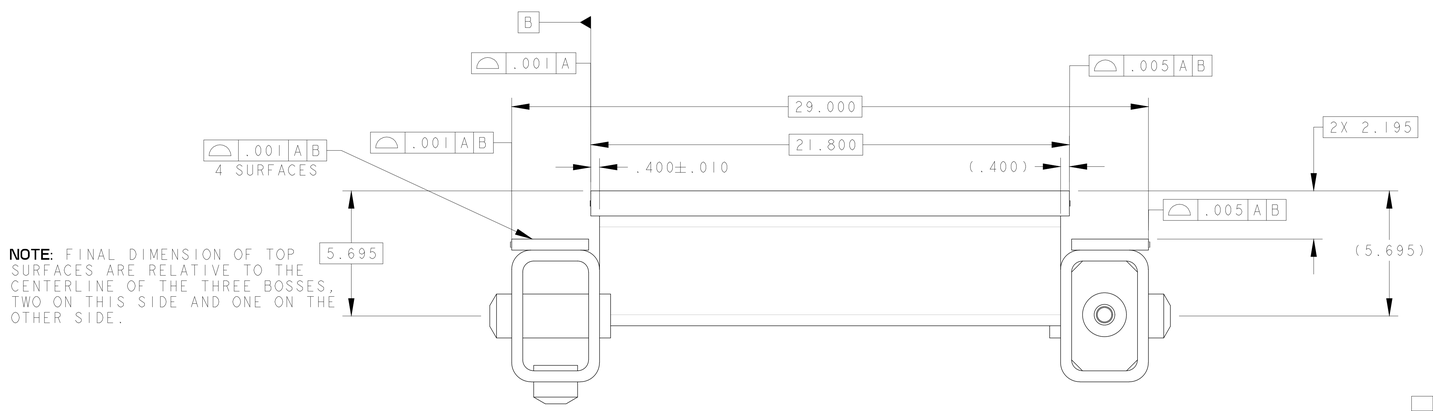

NOTE: FINAL DIMENSION OF TOP SURFACES ARE RELATIVE TO THE CENTERLINE OF THE THREE BOSSES, TWO ON THIS SIDE AND ONE ON THE OTHER SIDE.

FINAL MACHINING

NOTE: AFTER MACHINING SIDES OF ITEMS 6,7,8,9 AND 10 REMOVE ANY BURRS FROM TAPPED HOLES.

HOLE DESCRIPTIONS

HOLE	DESCRIPTION (FOR REFERANCE ONLY)
AA	Ø.3750/.3748 ↧ .75
BB	Ø.3750/.3748 ↧ .50
CC	3/8-16 UNC-2B ↧ .75
DD	3/8-16 UNC-2B ↧ THRU
EE	5/16-18 UNC-2B ↧.62

SCALE 3/8

REV	DWG	CHK	ZONE	DATE	CHANGES
C	AD			5/23/01	SEE SHEET 1 OF 7
B	AD			5/01	SEE SHEET 1 OF 7
A	AD			5/01	INITIAL RELEASE

UNLESS OTHERWISE SPECIFIED
PROJECTION:
TOLERANCES: X.X ± 0.1 FRAC. ± 1/64; X.XX ± 0.03 Angles ± 1.0°; X.XXX ± 0.010 FINISH 125
DO NOT SCALE PRINT
THREADS ARE CLASS 2
CHAMFER ENDS OF ALL SCREW THREADS 30°
CUT ROUND, 1.5 THREAD RELIEF ON MACHINED THREADS
BREAK EDGES .016 MAX. ON MACHINED WORK
REMOVE BURRS, WELD SPLATTER & LOOSE SCALE
IN ACCORDANCE WITH ASME Y14.5M & B46.1

SHOP ORDERS
ACCT. NO.: NO. R500; SER NO.: -; DATE: -; ISSD: -; DRD: -; REQD: -
SURFACE TREATMT.: -
IDENT METHOD: TAG
PROJECT NUMBER: N/A
PROJECT NAME: N/A
DWN BY: Allan DeMello DATE: 22-May-01
CHK BY: D. Oshatz DATE
APR BY: D. Oshatz DATE

ERNEST ORLANDO LAWRENCE BERKELEY NATIONAL LABORATORY
UNIVERSITY OF CALIFORNIA - BERKELEY
SNS - FES MEBT
MECHANICAL SUB-SYSTEMS - RAFT SYSTEMS
RAFT #2 WELDMENT ASSEMBLY

MICROFILMED: | DWG. TYPE: ASSEM | SHOWN ON: 25B451 | SCALE: 3/8 | SHEET 6 OF 7 | DO NOT SCALE PRINTS
PATENT CLEAR: | DESIGN ACCT. NO.: - | CATEGORY CODE: FE3313 | DWG. NO.: 25B4546 | SIZE: C | REV.: C

DWG. NO. 25B4546 SIZE/REV. C 6

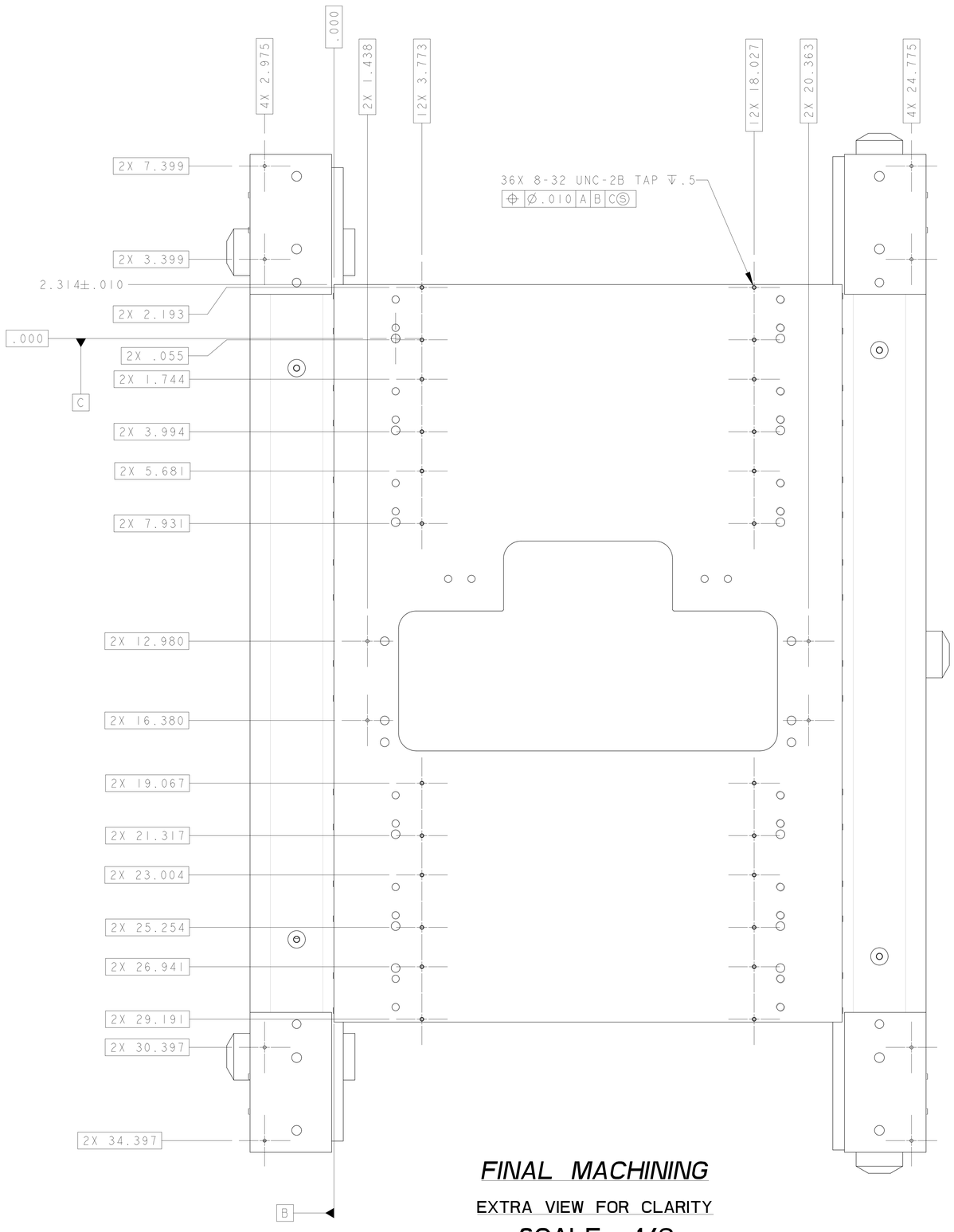

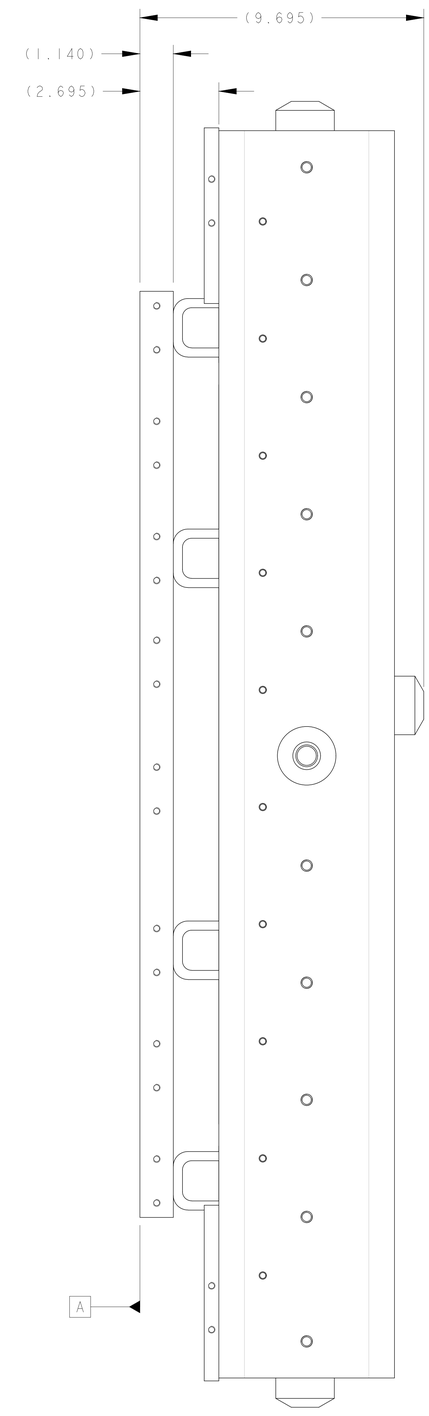

FINAL MACHINING

EXTRA VIEW FOR CLARITY

SCALE 1/2

REV	DWG	CHK	ZONE	DATE	CHANGES
C	AD			5/23/01	SEE SHEET 1 OF 7
B	AD			5/01	SEE SHEET 1 OF 7
A	AD			5/01	INITIAL RELEASE

UNLESS OTHERWISE SPECIFIED
PROJECTION:
TOLERANCES
X.X ± 0.1 FRAC. ± 1/64
X.XX ± 0.03 Angles ± 1.0°
X.XXX ± 0.010 FINISH 125/
DO NOT SCALE PRINT
THREADS ARE CLASS 2
CHAMFER ENDS OF ALL SCREW THREADS 30°
CUT ROUND, 1.5 THREAD RELIEF ON MACHINED THREADS
BREAK EDGES .016 MAX. ON MACHINED WORK
REMOVE BURRS, WELD SPLATTER & LOOSE SCALE
IN ACCORDANCE WITH ASME Y14.5M & B46.1

SHOP ORDERS

SER NO.	-		
ACCT NO.		DATE	-
REQD		ISSD	-
DEL TO		DATE	-
		REQD	-
SURFACE TREATMT	-		
IDENT METHOD	TAG		
PROJECT NUMBER	N/A		
PROJECT NAME	N/A		
DWN BY	Allan DeMello	DATE	22-May-01
CHK BY	D. Oshatz	DATE	
APR BY	D. Oshatz	DATE	

ERNEST ORLANDO LAWRENCE
BERKELEY NATIONAL LABORATORY
UNIVERSITY OF CALIFORNIA - BERKELEY

SNS - FES MEBT
MECHANICAL SUB-SYSTEMS - RAFT SYSTEMS
RAFT #2 WELDMENT ASSEMBLY

MICROFILMED:	DWG. TYPE	SHOWN ON	SCALE: 1/2	DO NOT SCALE PRINTS
	ASSEM	25B451	SHEET 7 OF 7	
PATENT CLEAR:	DESIGN ACCT. NO.	CATEGORY CODE	DWG. NO.	SIZE / REV.
	-	FE3313	25B4546	C

DWG. NO. 25B4546 SHT 7 OF 7 REV C

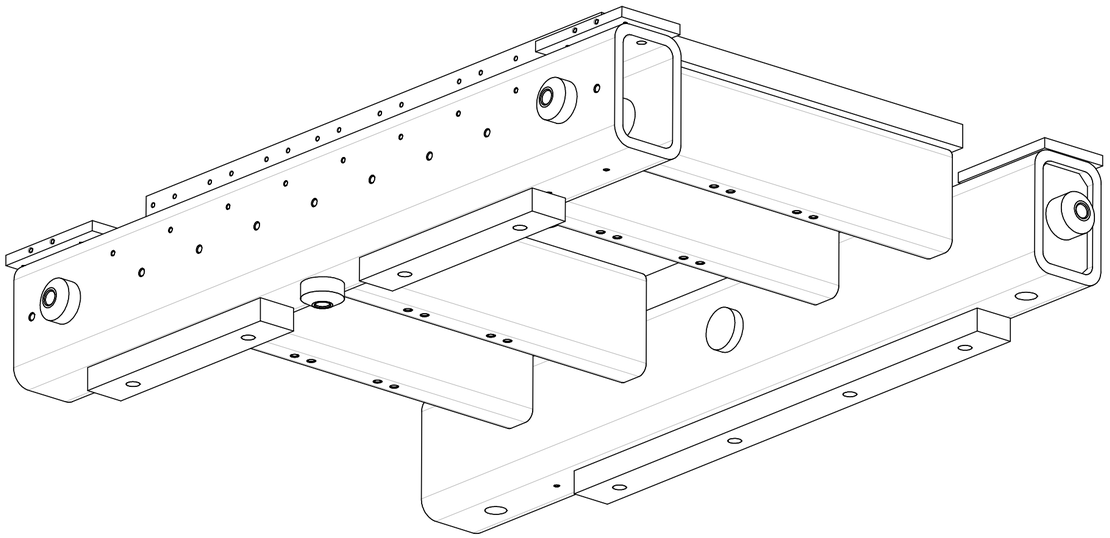

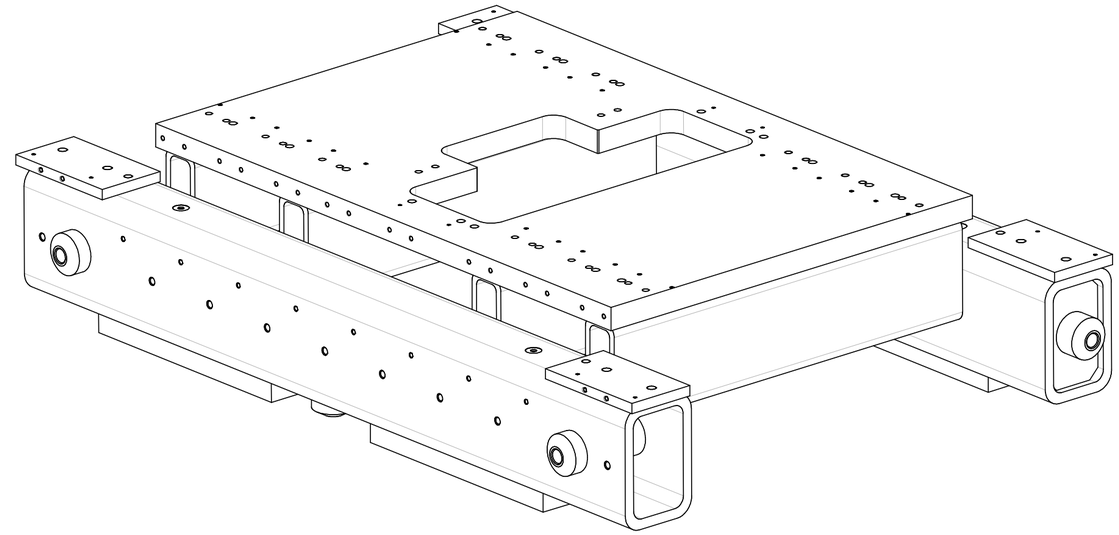

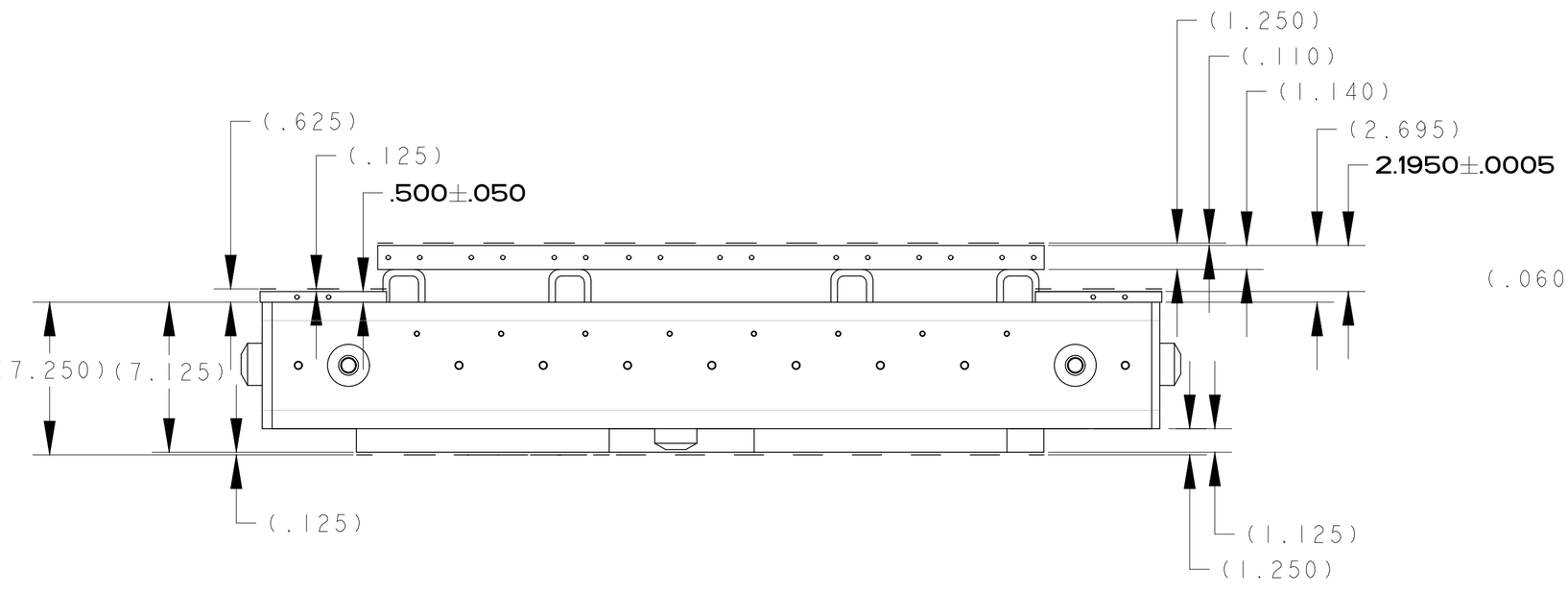

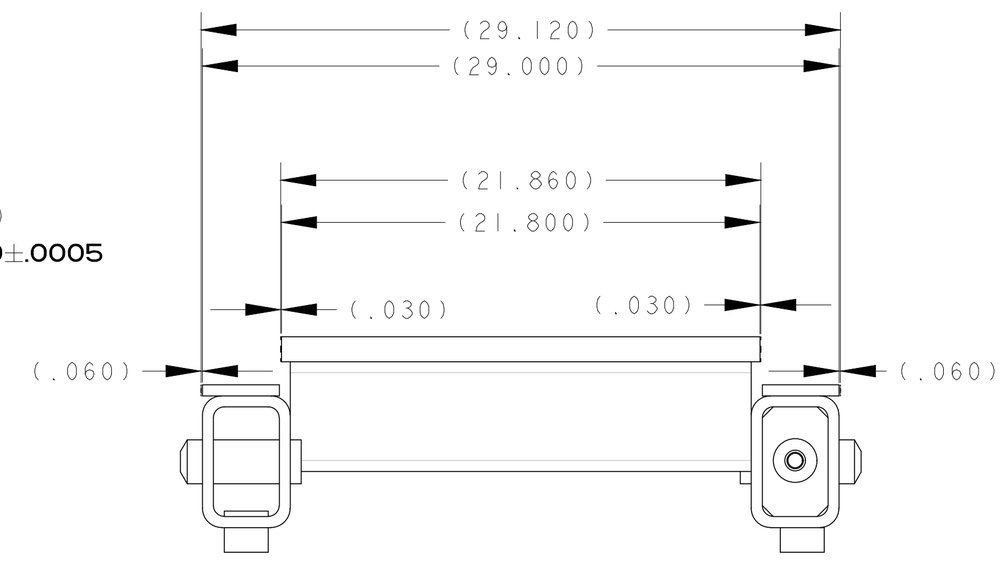

25B454 GRINDING REFERENCE DRAWING
SCALE 3/16

FOR RAFT #2 (25B454)

25B454 GRINDING STAND-OFF REFERENCE DRAWING
SCALE 1/2

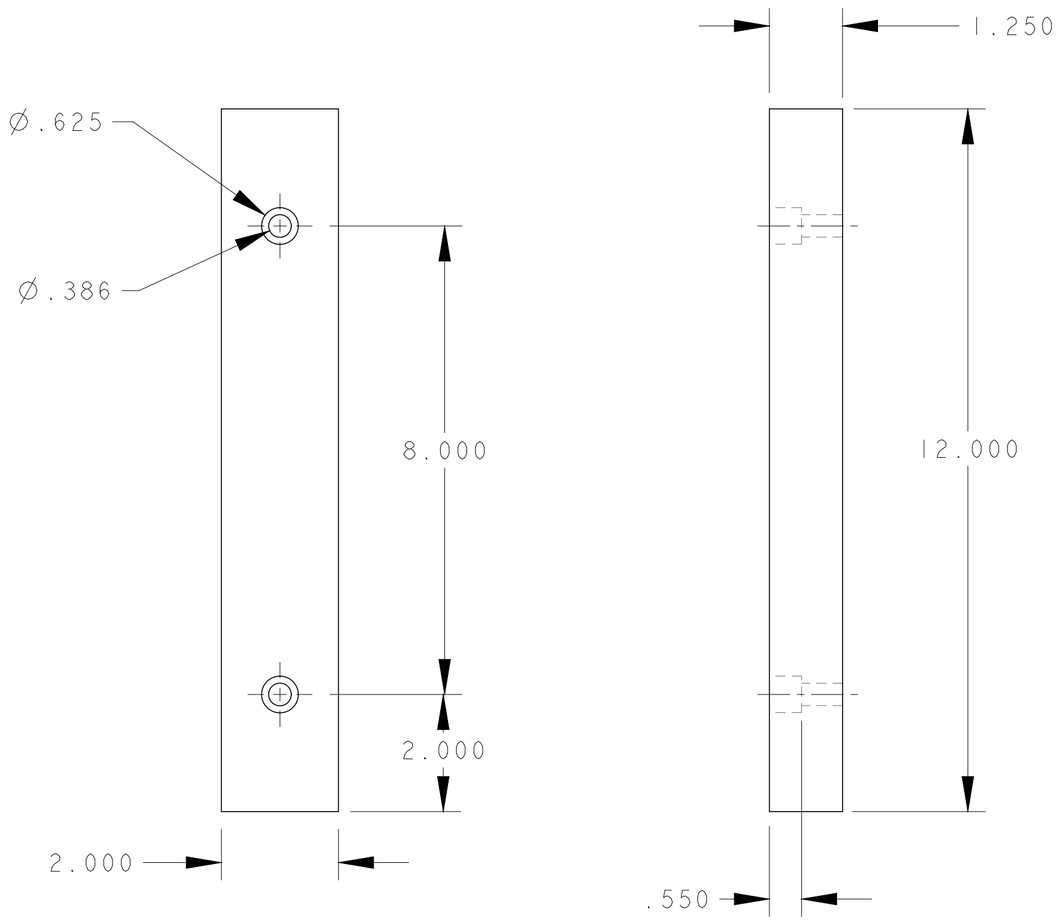

NOTE: 2 required
MARK ON SIDE "R2 L1" and "R2 L2"

FOR RAFT #2 (25B454)

25B454 GRINDING STAND-OFF REFERENCE DRAWING
SCALE 1/4

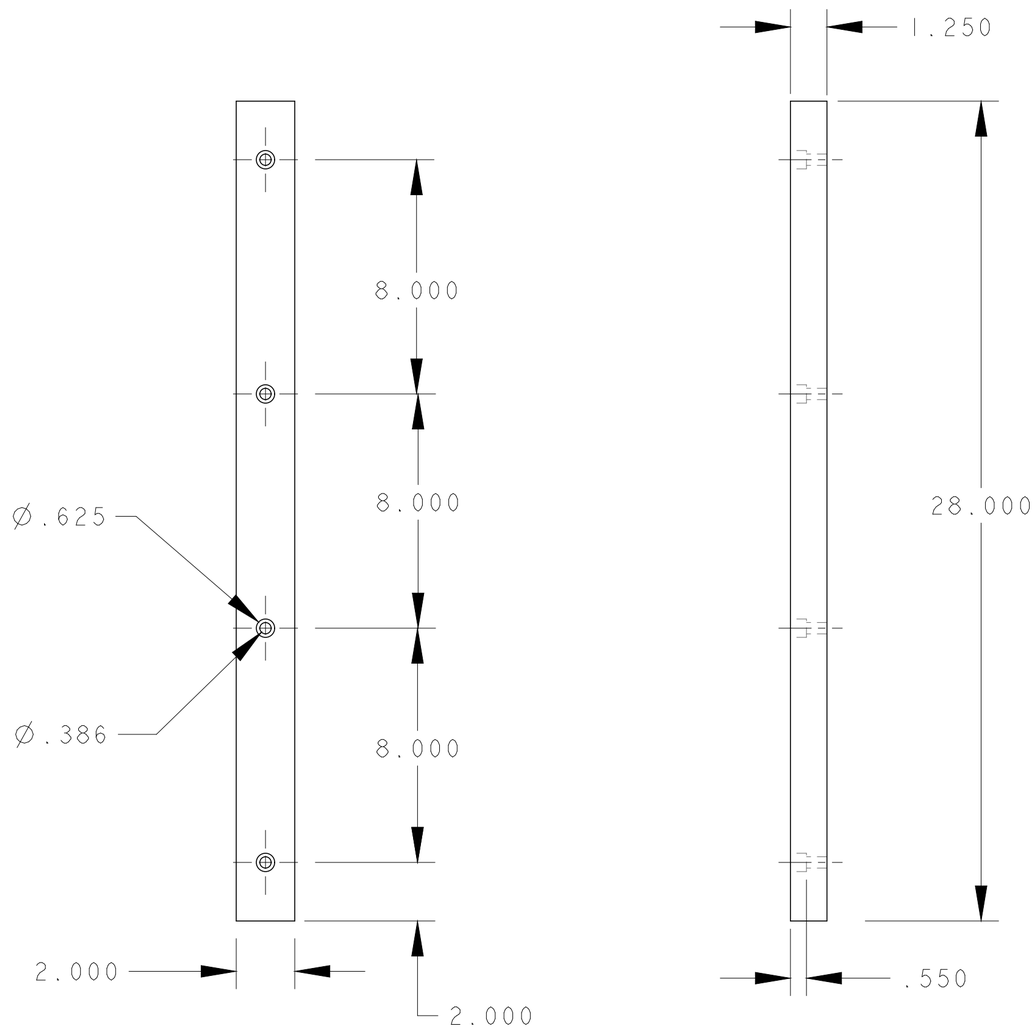

NOTE: MARK ON SIDE "R2 R"