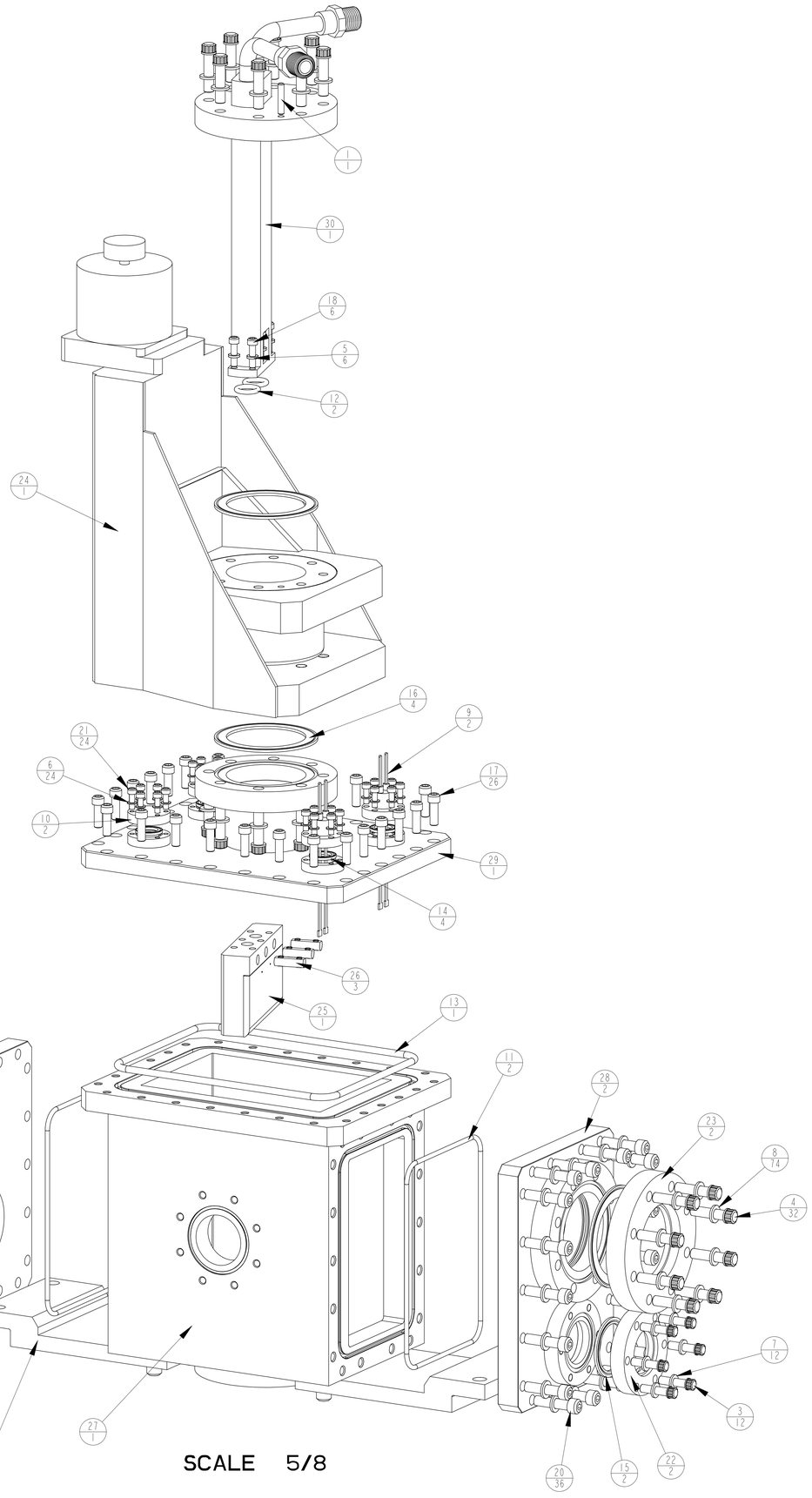

SCALE 5/8

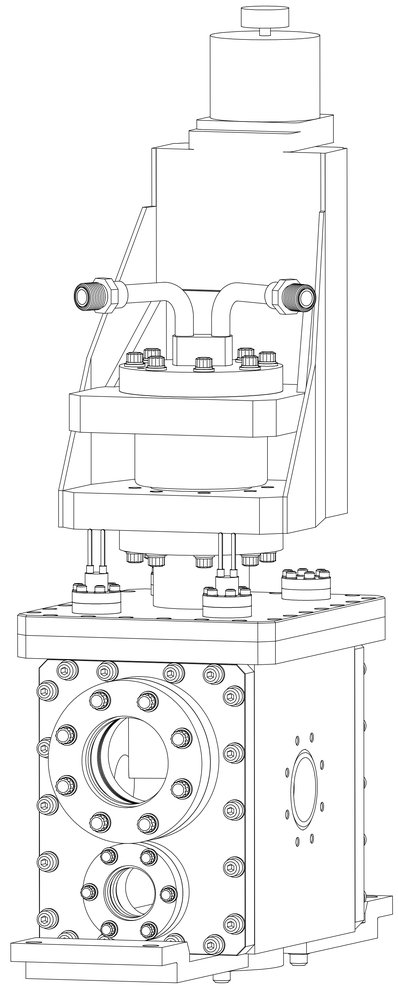

SCALE 5/8

NOTES:

1. FINISHED PART TO BE VACUUM TIGHT.
   LEAK RATE NOT TO EXCEED
   1 X 10^-8 TORR - LITERS PER SECOND HELIUM.
2. ULTRA-HIGH VACUUM CLEANING AND PACKING REQUIRED.
3. ASSEMBLE IN CLEAN ENVIRONMENT.
   AFTER ASSEMBLY, WRAP TO MAINTAIN CLEANLINESS.

ITEM	PART NO	REQD	DESCRIPTION	MATERIAL
30	25B413	1	WATER MANIFOLD	-
29	25B410	1	VACUUM CHAMBER - TARGET ACTUATOR FLANGE WELDMENT	304 SS
28	25B408	2	VIEW PORT FLANGE WELDMENT	304 SS
27	25B407	1	VACUUM CHAMBER LOWER ASSEMBLY	-
26	25B167	3	10-32 BARREL NUT	304 SS
25	25B166	1	TARGET BRAZEMENT - FINAL MACHINING	MOLYBDENUM TZM
24	25B100	1	Modified Actuator, EMT-2.5-2/ Block Up	-
23	-	2	VIEWPORT, 4.5" , GLASS, MDC P/N 450004 OR EQUIV.	-
22	-	2	VIEWPORT, 2.75" , GLASS, MDC P/N 450002 OR EQUIV.	-
21	-	24	SOCKET HEAD CAP SCREW, 8-32 x .5", SILVER PLATED	300 SS
20	-	36	SOCKET HEAD CAP SCREW, 5/16-18 x 1.25", SILVER PLATED	316 SS
19	-	6	SOCKET HEAD CAP SCREW, 5/16-18 x 1", SILVER PLATED	316 SS
18	-	6	SOCKET HEAD CAP SCREW, 10-32 x .75", SILVER PLATED	316 SS
17	-	26	SOCKET HEAD CAP SCREW, 1/4-20 x .75", SILVER PLATED	316 SS
16	-	4	OFE COPPER GASKET, 4-1/2", MDC P/N 191009 OR EQUIV.	OFE Copper
15	-	2	OFE COPPER GASKET, 2-3/4", MDC P/N 191004 OR EQUIV.	OFE Copper
14	-	4	OFE COPPER GASKET, 1-1/3", MDC P/N 191000 OR EQUIV.	OFE Copper
13	-	1	O-RING, 3/16"x 8-1/4" I.D., PARKER P/N 2-370 OR EQUIV.	VITON
12	-	2	O-RING, 1/8" x 9/16" I.D., PARKER P/N 2-207 OR EQUIV.	VITON
11	-	2	O-RING, 1/8" x 6-3/4" I.D., PARKER P/N 2-261 OR EQUIV.	VITON
10	-	2	MINI-CONFLAT FLANGE, MDC P/N 110000 OR EQUIV.	304 SS
9	-	2	K-TYPE THERMOCOUPLE, CERAMASEAL P/N 8118-01-CF OR EQUIV.	-
8	-	74	FLAT WASHER, 5/16", MCMASTER-CARR #98017A690 OR EQUIV.	SS 18-8
7	-	12	FLAT WASHER, 1/4", MCMASTER-CARR #90945A761 OR EQUIV.	SS
6	-	24	FLAT WASHER, #8, MCMASTER-CARR #90945A726 OR EQUIV.	SS
5	-	6	FLAT WASHER, #10, MCMASTER-CARR #90945A741 OR EQUIV.	SS
4	-	32	12-PT BOLT, 5/16-24 x 1.25", MDC P/N 190058 OR EQUIV.	300 SS
3	-	12	12-PT BOLT, 1/4-28 x .875", MDC P/N 190057 OR EQUIV.	300 SS
2	-	4	.250 x 1" DOWEL PIN	316 SS
1	-	1	.1875 x 1" DOWEL PIN	316 SS

REV	DWG	CHK	ZONE	DATE	CHANGES
A	AD			5/01	INITIAL RELEASE

UNLESS OTHERWISE SPECIFIED
PROJECTION:
TOLERANCES: X.X ± 0.1 FRAC. ± 1/64; X.XX ± 0.03 Angles ± 1.0°; X.XXX ± 0.010 FINISH 125
DO NOT SCALE PRINT
THREADS ARE CLASS 2
CHAMFER ENDS OF ALL SCREW THEADS 30°
CUT ROUND, 1.5 THREAD RELIEF ON MACHINED THREADS
BREAK EDGES .016 MAX. ON MACHINED WORK
REMOVE BURRS, WELD SPLATTER & LOOSE SCALE
IN ACCORDANCE WITH ASME Y14.5M & 846.1

SHOP ORDERS
ACC NO. / REQD
DEL TO
SURFACE TREATMT
IDENT METHOD TAG
PROJECT NUMBER na
PROJECT NAME
DWN BY Allan DeMello DATE 17-May-01
CHK'D BY D. Oshatz DATE
APP'D BY D. Oshatz DATE

ERNEST ORLANDO LAWRENCE BERKELEY NATIONAL LABORATORY
UNIVERSITY OF CALIFORNIA - BERKELEY

SNS - FES MEBT
CHOPPER TARGET
TARGET CHAMBER, COMPLETE ASSEMBLY

MICROFILMED: DWG. TYPE ASSEM | SHOWN ON - | SCALE: 5/8 | DO NOT SCALE PRINTS
SHEET 1 OF 2
PATENT CLEAR: DESIGN ACCT. NO. - | CATEGORY CODE FE3312 | DWG. NO. 25B4006 | SIZE A | REV. A

DWG. NO. 25B4006 A 1

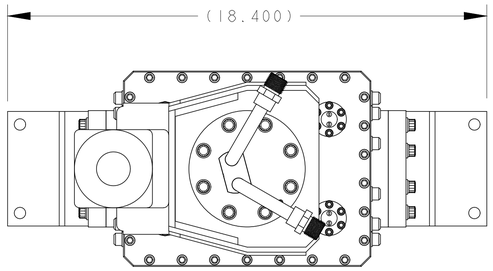

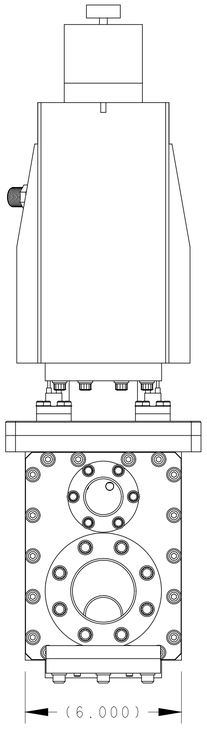

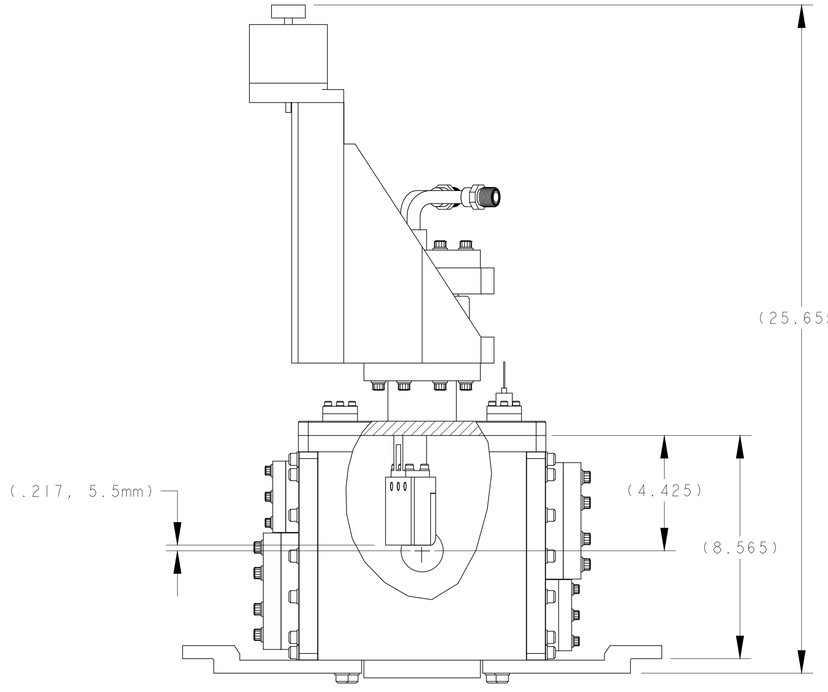

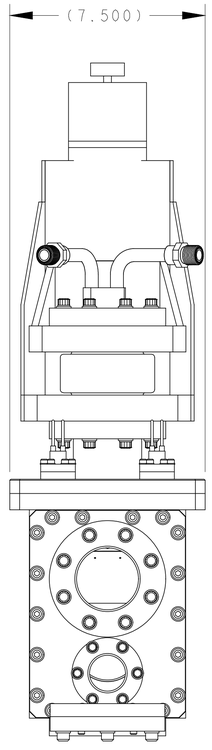

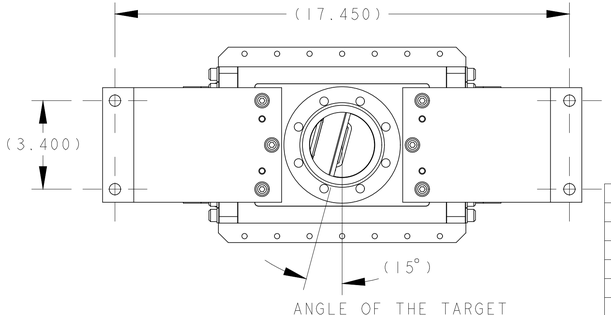

REV	DWG	CHK	ZONE	DATE	CHANGES
A	AD			5/01	INITIAL RELEASE

UNLESS OTHERWISE SPECIFIED
PROJECTION:
TOLERANCES: X.X ± 0.1 FRAC. ± 1/64; X.XX ± 0.03 Angles ± 1.0°; X.XXX ± 0.010 FINISH 125
DO NOT SCALE PRINT
THREADS ARE CLASS 2
CHAMFER ENDS OF ALL SCREW TREADS 30°
CUT ROUND, 1.5 THREAD RELIEF ON MACHINED THREADS
BREAK EDGES .016 MAX. ON MACHINED WORK
REMOVE BURRS, WELD SPLATTER & LOOSE SCALE
IN ACCORDANCE WITH ASME Y14.5M & B46.1

SHOP ORDERS

ACCT NO.	NO. REQD	SER NO.	-
DEL TO		DATE ISSD	-
SURFACE TREATMT	-	DATE REQD.	-
IDENT METHOD	TAG		
PROJECT NUMBER	na		
PROJECT NAME	-		
DWG BY	Allan DeMello	DATE	17-May-01
CHK BY	D. Oshatz	DATE	
APR BY	D. Oshatz	DATE	

ERNEST ORLANDO LAWRENCE BERKELEY NATIONAL LABORATORY
UNIVERSITY OF CALIFORNIA - BERKELEY

SNS - FES MEBT
CHOPPER TARGET
TARGET CHAMBER, COMPLETE ASSEMBLY

MICROFILMED:	DWG. TYPE	SHOWN ON	SCALE: 1/32	DO NOT SCALE PRINTS
	ASSEM	-	SHEET 2 OF 2	
PATENT CLEAR:	DESIGN ACCT. NO.	CATEGORY CODE	DWG. NO.	SIZE / REV.
	-	FE3312	25B4004	A

Dwg. File: 25B4004_Mech_Fig_2.dgn

DWG. NO.	SIZE	REV.	SH.
25B1001		A	1

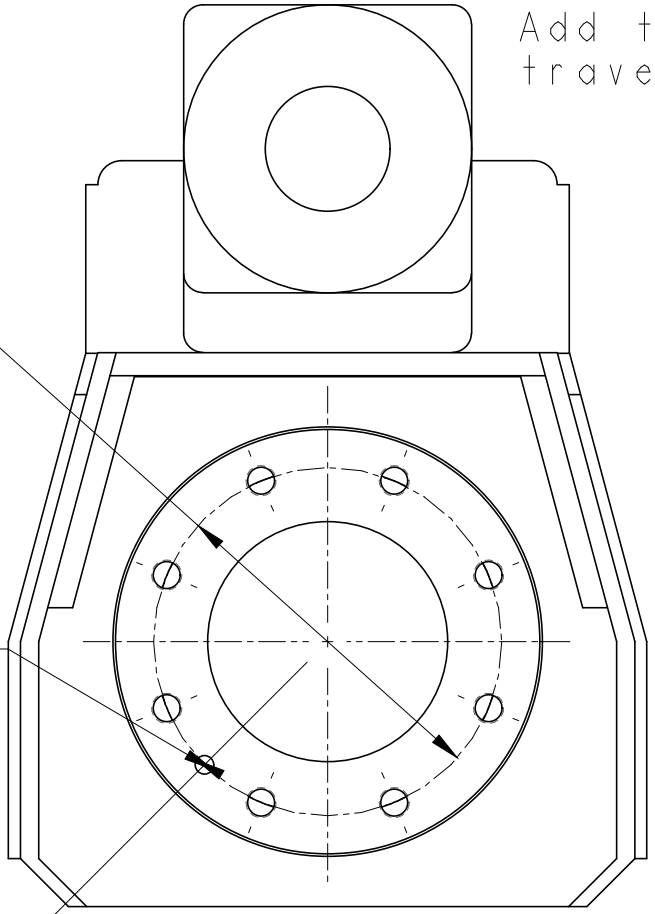

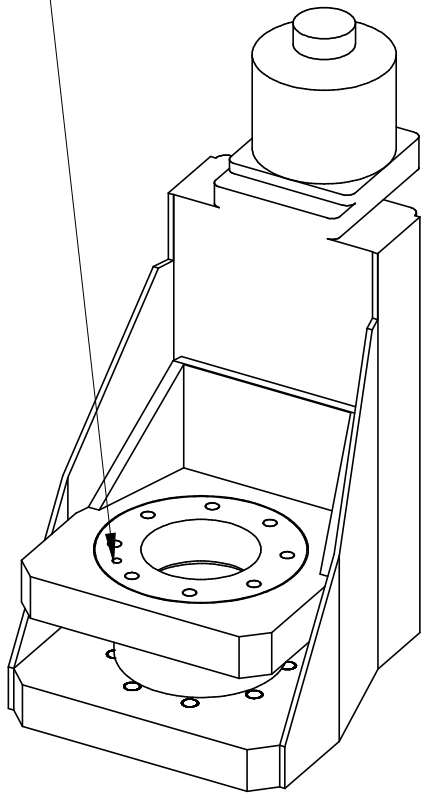

Thermionics Precision Linear Translator

REV	DWG	CHK	DATE	CHANGES	DESCRIPTION	MATERIAL
					Locating hole added to standard part	-

UNLESS OTHERWISE SPECIFIED

PROJECTION:

TOLERANCES		
	X.X ±0.1	FRAC. ±1/64
	X.XX ±0.03	Angles ±1.0°
	X.XXX ±0.010	FINISH 125

DO NOT SCALE PRINT

THREADS ARE CLASS 2
CHAMFER ENDS OF ALL SCREW TREADS 30°
CUT ROUND, 1.5 THREAD RELIEF ON MACHINED THREADS
BREAK EDGES .016 MAX. ON MACHINED WORK
REMOVE BURRS, WELD SPLATTER & LOOSE SCALE
IN ACCORDANCE WITH ASME Y14.5M & B46.1

SHOP ORDERS

ACCT NO.	NO. REQD	SER NO.	-
		DATE ISSD	-
DEL TO		DATE REQD	-
SURFACE TREATMT	-		
IDENT METHOD	TAG		
PROJECT NUMBER	na		
PROJECT NAME	Thermionics, Northwest Inc.		
DWG BY	D. Oshatz	DATE	13-Jul-00
CHK BY	None	DATE	
APR BY	None	DATE	

ERNEST ORLANDO LAWRENCE BERKELEY NATIONAL LABORATORY
UNIVERSITY OF CALIFORNIA - BERKELEY

SNS - FES MEBT
Mech. Beam Trans. Systems - Chooper Target Modified Actuator, EMT-2.5-2/ Block Up

MICROFILMED:	DWG. TYPE	SHOWN ON	SCALE: 1/2	DO NOT SCALE PRINTS
	PART	-	SHEET 1 OF 1	

PATENT CLEAR:	DESIGN ACCT. NO.	CATEGORY CODE	DWG. NO.	SIZE	REV.
	-	FE-3312	25B1001		A

Dwg. File: 25B100 Model File: 25B100

Rev. 1/29/2000 J. R. Osborn

DWG. NO.	SIZE	REV.	SH.
25B1901		A	1

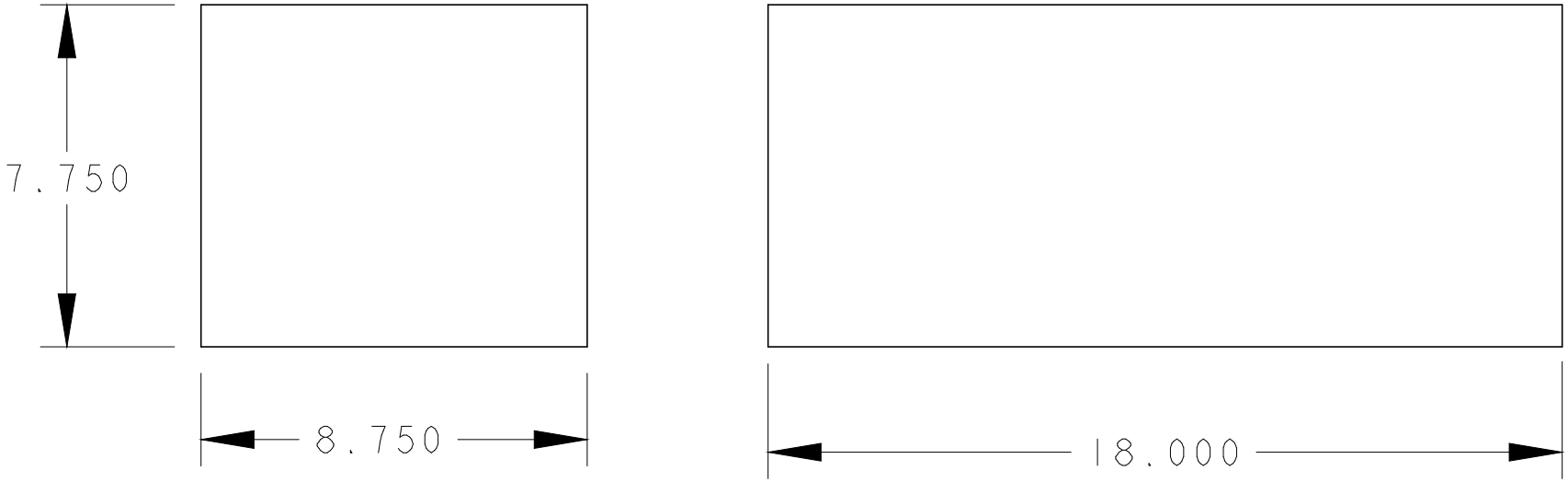

REV	DWG	CHK	DATE	CHANGES
				FORGING, SUPPLIED BY LBNL
				DESCRIPTION

304 SS
MATERIAL

UNLESS OTHERWISE SPECIFIED
PROJECTION:

TOLERANCES		
X.X ±0.1	FRAC. ±1/64	
X.XX ±0.03	Angles ±1.0°	
X.XXX ±0.010	FINISH 125	

DO NOT SCALE PRINT

THREADS ARE CLASS 2
CHAMFER ENDS OF ALL SCREW TREADS 30°
CUT ROUND, 1.5 THREAD RELIEF ON MACHINED THREADS
BREAK EDGES .016 MAX. ON MACHINED WORK
REMOVE BURRS, WELD SPLATTER & LOOSE SCALE
IN ACCORDANCE WITH ASME Y14.5M & B46.1

SHOP ORDERS

SER NO.	-		
ACCT NO.	NO. REQD	DATE ISSD	-
DEL TO		DATE REQD	-
SURFACE TREATMT	-		
IDENT METHOD	TAG		
PROJECT NUMBER	N/A		
PROJECT NAME	N/A		
DWG BY	Allan DeMello	DATE	04-Jan-01
CHK BY	D. Oshatz	DATE	
APR BY	D. Oshatz	DATE	

ERNEST ORLANDO LAWRENCE BERKELEY NATIONAL LABORATORY
UNIVERSITY OF CALIFORNIA - BERKELEY

SNS - FES MEBT
CHOPPER TARGET
STAINLESS STEEL FORGING

MICROFILMED:	DWG. TYPE	SHOWN ON	SCALE: 1/4	DO NOT SCALE PRINTS
	PART	25B401	SHEET 1 OF 1	
PATENT CLEAR:	DESIGN ACCT. NO.	CATEGORY CODE	DWG. NO. 25B1901	SIZE A / REV. A
	-	FE3312		

Dwg. File: 25B190 Model File: 25B190

Rev. 1/29/2000 J. R. Osborn

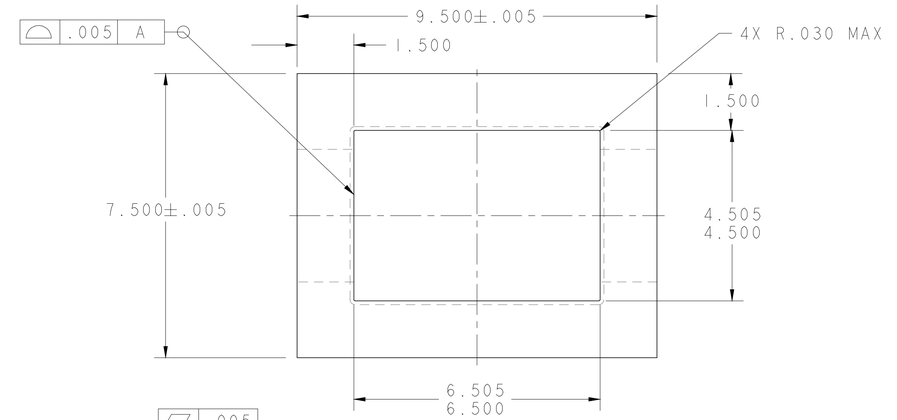

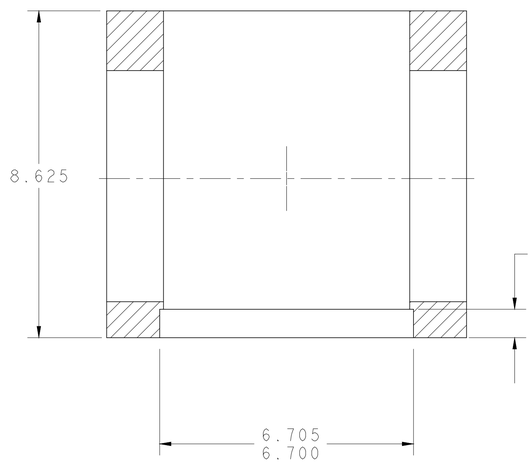

SECTION Y-Y

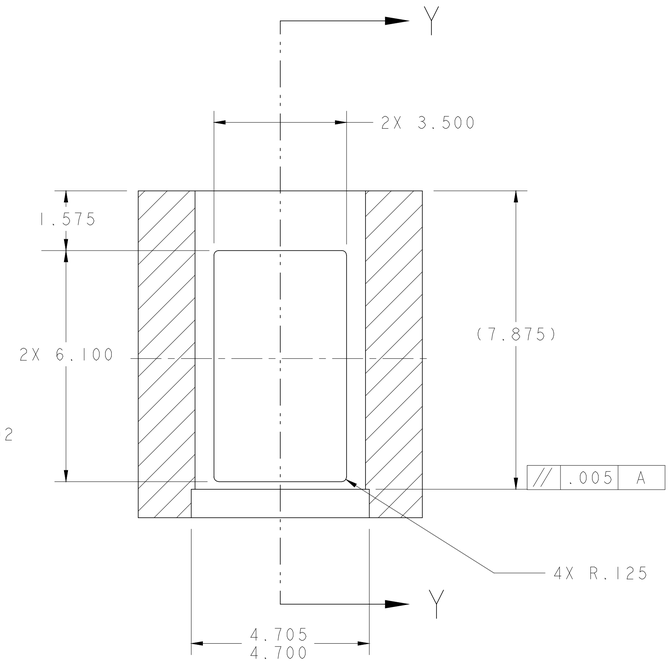

SECTION X-X

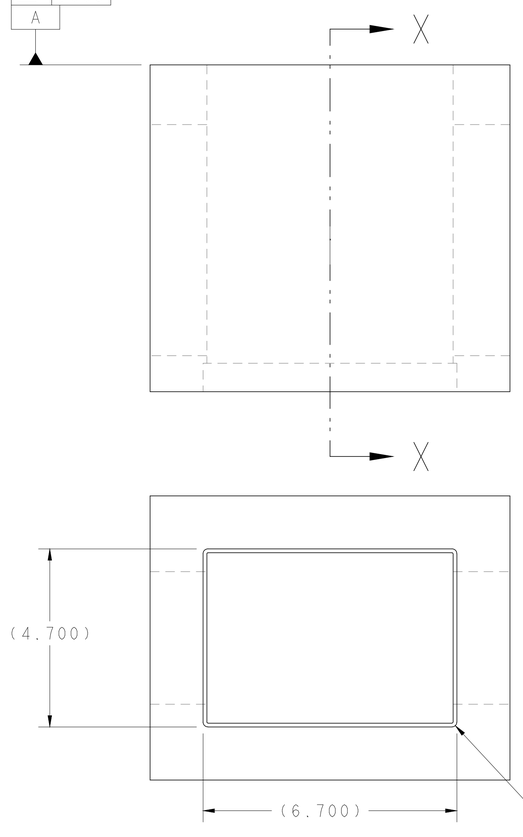

NOTES:
1. STRESS RELIEVE PART PRIOR TO FINAL MACHINING. (OR PRIOR TO EDM CUT)

ITEM	PART NO	REQD	MATERIAL	MAT. LOCATION
	25B190		304 SS FORGING	-

REV	DWG	CHK	ZONE	DATE	CHANGES

UNLESS OTHERWISE SPECIFIED
PROJECTION:
TOLERANCES: X.X ± 0.1 FRAC. ± 1/64; X.XX ± 0.03 Angles ± 1.0°; X.XXX ± 0.010 FINISH 125
DO NOT SCALE PRINT
THREADS ARE CLASS 2
CHAMFER ENDS OF ALL SCREW TREADS 30°
CUT ROUND, 1.5 THREAD RELIEF ON MACHINED THREADS
BREAK EDGES .016 MAX. ON MACHINED WORK
REMOVE BURRS, WELD SPLATTER & LOOSE SCALE
IN ACCORDANCE WITH ASME Y14.5M & B46.1

SHOP ORDERS

ACCT NO.	NO. REQD	SER NO.	-
DEL TO		DATE ISSD	-
SURFACE TREATMT		DATE REQD	-
IDENT METHOD	TAG		
PROJECT NUMBER			
PROJECT NAME			
DWG BY	Allan DeMello	DATE	14-Nov-00
CHK BY	D. Oshatz	DATE	
APR BY	D. Oshatz	DATE	

ERNEST ORLANDO LAWRENCE
BERKELEY NATIONAL LABORATORY
UNIVERSITY OF CALIFORNIA - BERKELEY

SNS - FES MEBT
CHOPPER TARGET
VACUUM CHAMBER - INITIAL MACHINING

MICROFILMED:	DWG. TYPE	SHOWN ON	SCALE: 1/2	DO NOT SCALE PRINTS
	PART	25B405	SHEET 1 OF 1	
PATENT CLEAR:	DESIGN ACCT. NO.	CATEGORY CODE	DWG. NO.	SIZE / REV.
	-	FE3312	25B4014	A

Dwg. File: 25B4PT_Model_File: 25B4PT

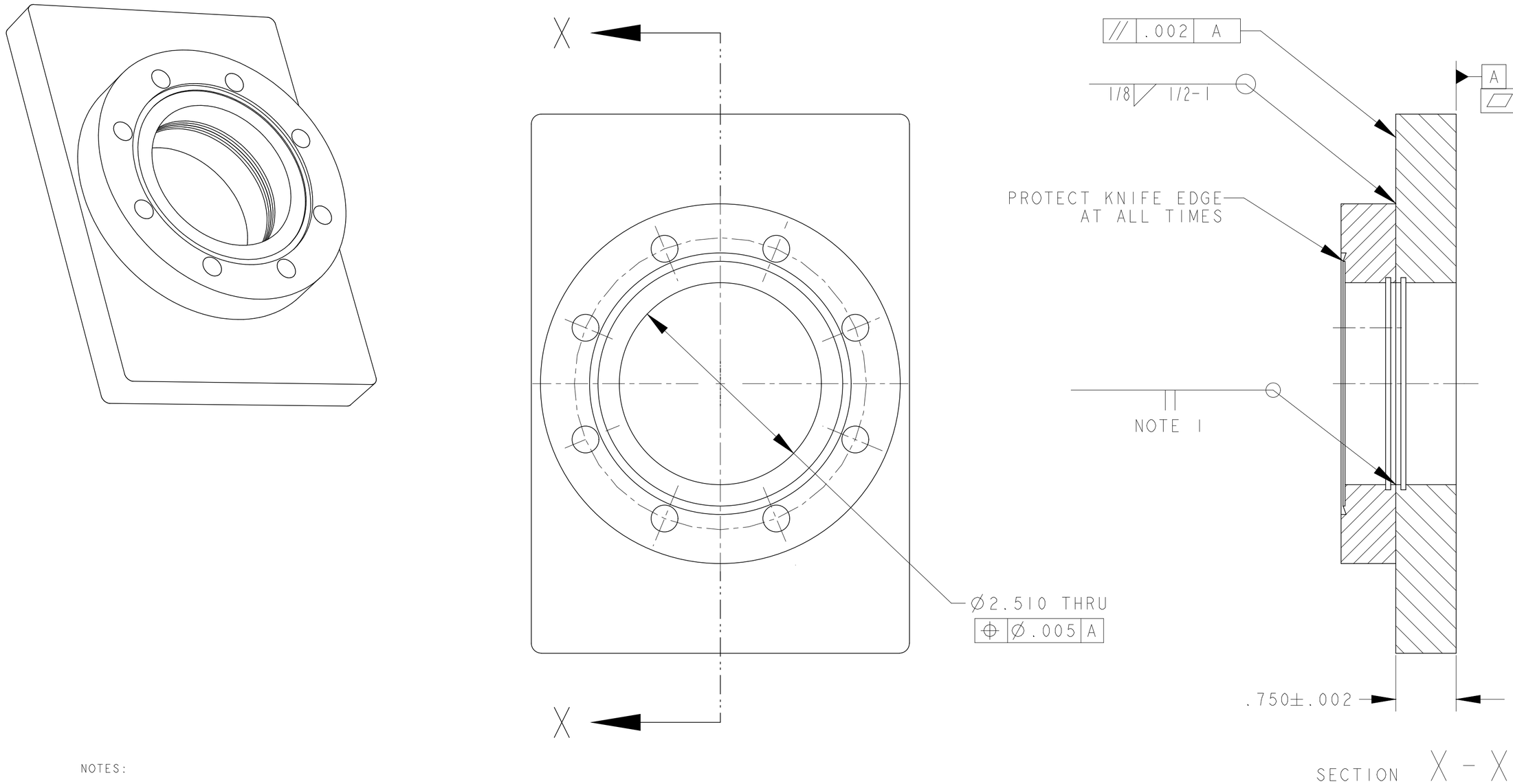

NOTES:

1. FINISHED PART TO BE VACUUM TIGHT.
   LEAK RATE NOT TO EXCEED 1 X 10^-8 TORR - LITERS PER SECOND HELIUM.

2. ULTRA-HIGH VACUUM CLEANING AND PACKING REQUIRED.

3. ASSEMBLE IN CLEAN ENVIRONMENT.
   AFTER ASSEMBLY AND WELDING, WRAP TO MAINTAIN CLEANLINESS.

4. PROTECT CONFLAT FLANGE KNIFE EDGE AT ALL TIMES.

ITEM	PART NO	REQD	DESCRIPTION	MATERIAL
2	25B404	1	VIEWPORT, 4.5" CONFLAT FLANGE	304 SS
1	25B403	1	VACUUM CHAMBER - BOTTOM PLATE	304 SS

REV	DWG	CHK	ZONE	DATE	CHANGES

UNLESS OTHERWISE SPECIFIED
PROJECTION:

TOLERANCES		
	X.X ± 0.1	FRAC. ± 1/64
	X.XX ± 0.03	Angles ± 1.0°
	X.XXX ± 0.010	FINISH 125

DO NOT SCALE PRINT
THREADS ARE CLASS 2
CHAMFER ENDS OF ALL SCREW TREADS 30°
CUT ROUND, 1.5 THREAD RELIEF ON MACHINED THREADS
BREAK EDGES .016 MAX. ON MACHINED WORK
REMOVE BURRS, WELD SPLATTER & LOOSE SCALE
IN ACCORDANCE WITH ASME Y14.5M & B46.1

SHOP ORDERS
SER NO. -
ACCT NO. | NO. REQD | DATE ISSD -
DEL TO | DATE REQD -
SURFACE TREATMT -
IDENT METHOD TAG
PROJECT NUMBER na
PROJECT NAME N/A
DWG BY Allan DeMello | DATE 02-Jan-01
CHK BY D. Oshatz | DATE
APR BY D. Oshatz | DATE

ERNEST ORLANDO LAWRENCE
BERKELEY NATIONAL LABORATORY
UNIVERSITY OF CALIFORNIA - BERKELEY

SNS - FES MEBT
CHOPPER TARGET
BOTTOM PLATE ASSEMBLY

MICROFILMED:	DWG. TYPE	SHOWN ON	SCALE: 1/1	DO NOT SCALE PRINTS
	ASSEM	25B405	SHEET 1 OF 1	
PATENT CLEAR:	DESIGN ACCT. NO.	CATEGORY CODE	DWG. NO. SIZE	REV.
	-	FE3312	25B4023	A

DWG. NO. 25B4023 SIZE A REV. SH. 1

Dwg. File: 25B402 Model File: 25B402

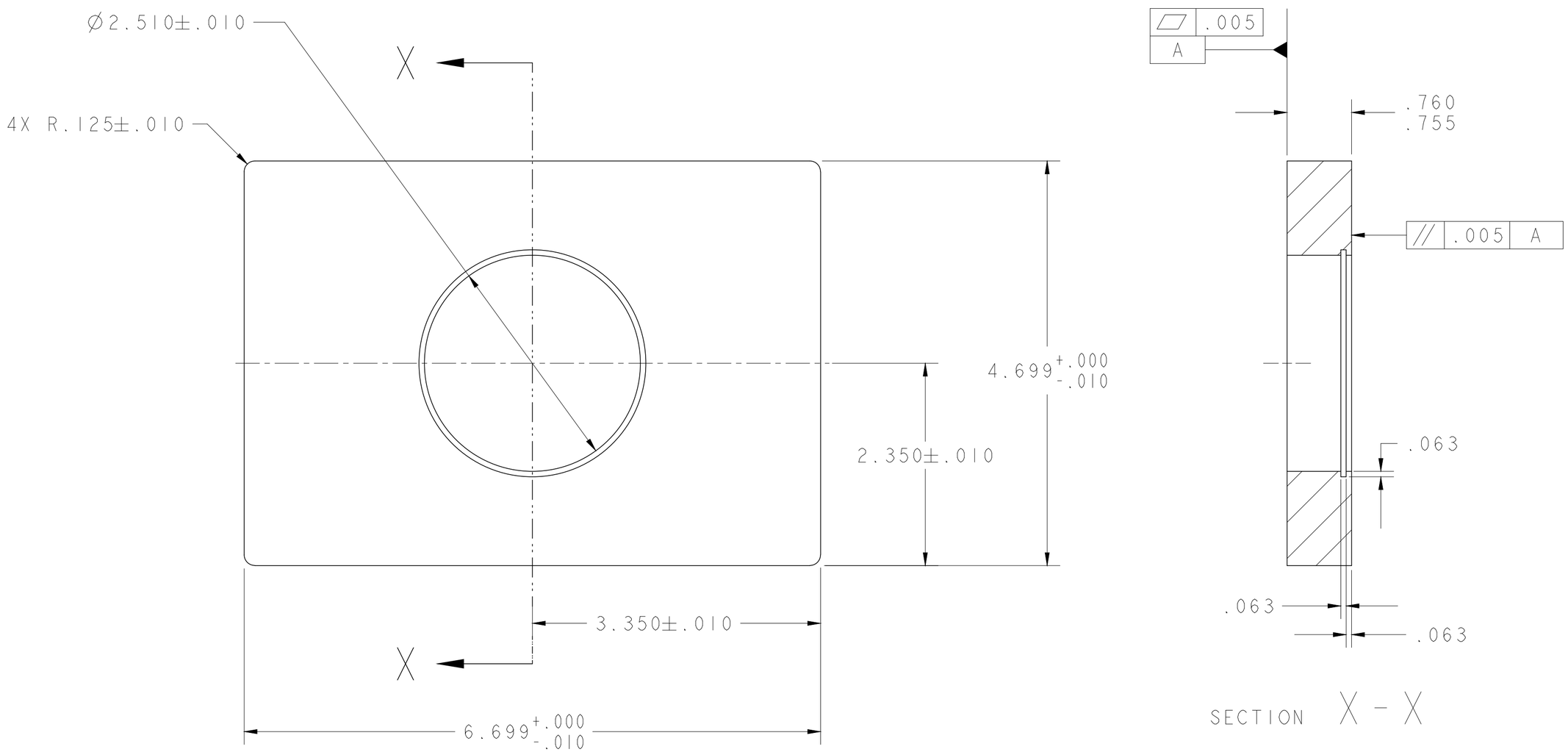

DESCRIPTION	MATERIAL	MAT. LOCATION
-	304 SS	-

REV	DWG	CHK	ZONE	DATE	CHANGES

UNLESS OTHERWISE SPECIFIED
PROJECTION:

TOLERANCES		
	X.X ± 0.1	FRAC. ± 1/64
	X.XX ± 0.03	Angles ± 1.0°
	X.XXX ± 0.010	FINISH 125

DO NOT SCALE PRINT
THREADS ARE CLASS 2
CHAMFER ENDS OF ALL SCREW TREADS 30°
CUT ROUND, 1.5 THREAD RELIEF ON MACHINED THREADS
BREAK EDGES .016 MAX. ON MACHINED WORK
REMOVE BURRS, WELD SPLATTER & LOOSE SCALE
IN ACCORDANCE WITH ASME Y14.5M & B46.1

SHOP ORDERS
SER NO. -
ACCT NO. | NO. REQD | DATE ISSD -
DEL TO | DATE REQD -
SURFACE TREATMT -
IDENT METHOD TAG
PROJECT NUMBER na
PROJECT NAME N/A
DWG BY Allan DeMello | DATE 06-Oct-00
CHK BY D. Oshatz | DATE
APR BY D. Oshatz | DATE

ERNEST ORLANDO LAWRENCE
BERKELEY NATIONAL LABORATORY
UNIVERSITY OF CALIFORNIA - BERKELEY

SNS - FES MEBT
CHOPPER TARGET
VACUUM CHAMBER - BOTTOM PLATE

MICROFILMED:	DWG. TYPE	SHOWN ON	SCALE: 1/1	DO NOT SCALE PRINTS
	PART	25B402	SHEET 1 OF 1	
PATENT CLEAR:	DESIGN ACCT. NO.	CATEGORY CODE	DWG. NO. SIZE	REV.
	-	FE3312	25B4033	A

DWG. NO. 25B4033 SIZE A REV. SH. 1

Dwg. File: 25B403 Model File: 25B403
Rev. 1/29/2000 J. R. Osborn

DWG. NO.	SIZE	REV.	SH.
25B4042	A	1	

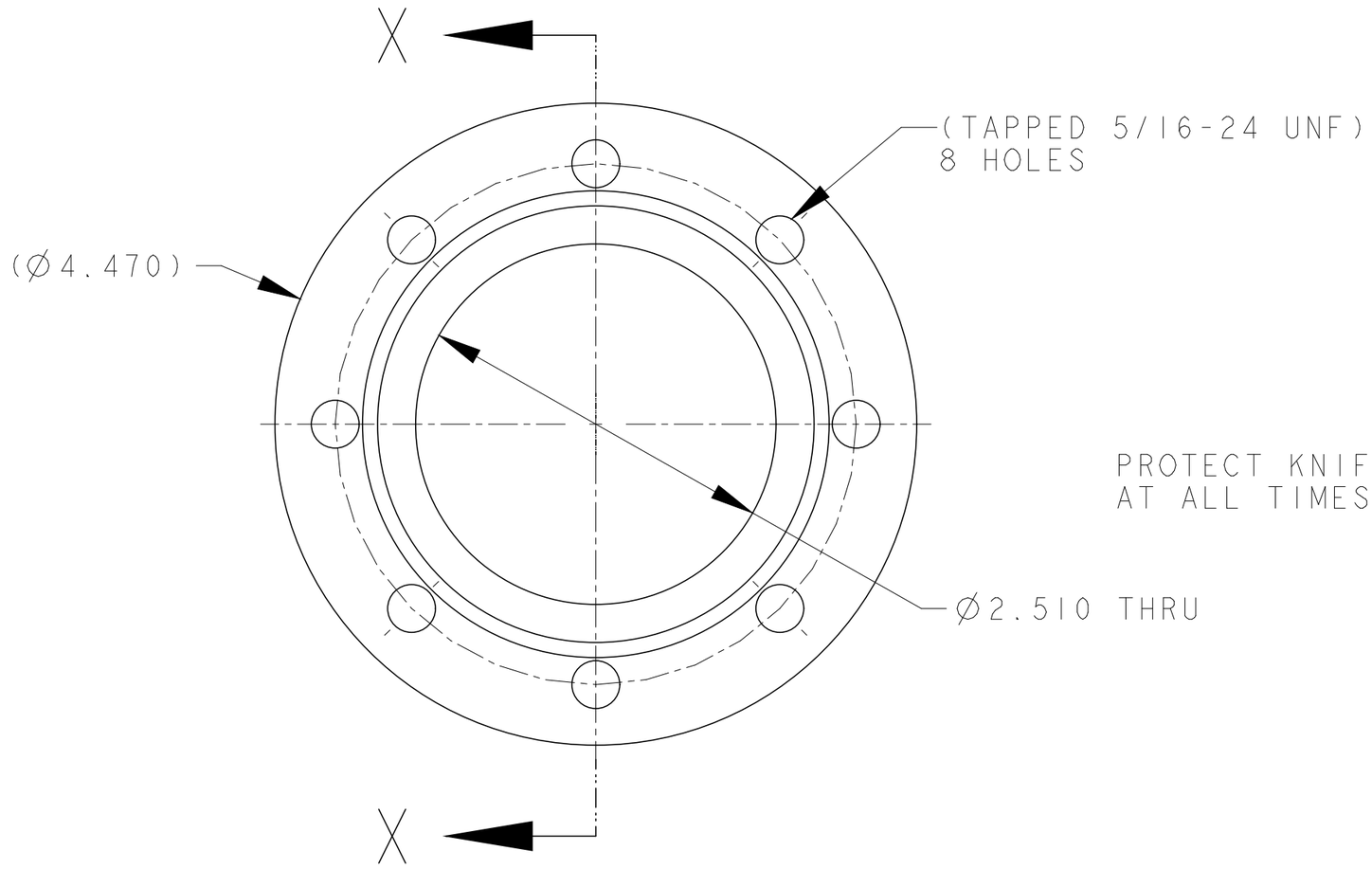

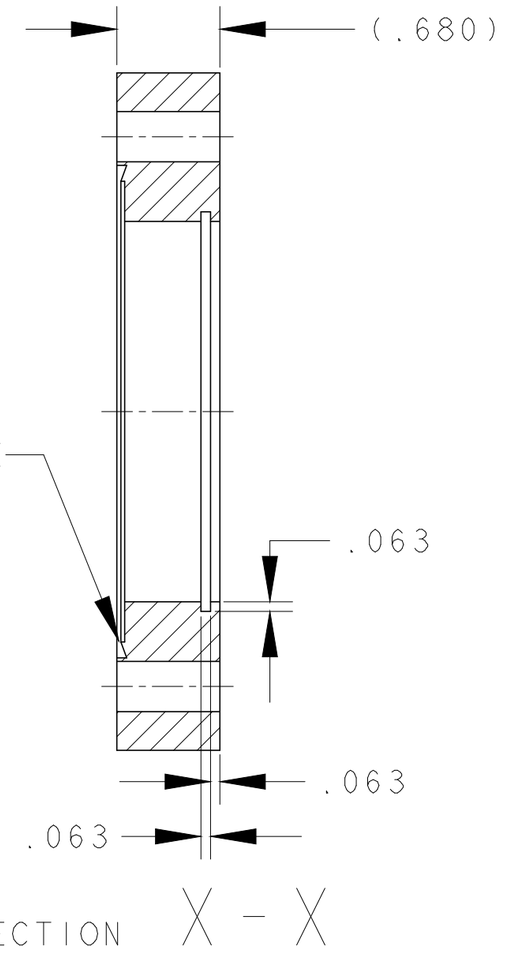

SECTION X - X

MDC PN 130021 OR EQUIV.	304 SS	-
DESCRIPTION	MATERIAL	MAT. LOCATION

REV	DWG	CHK	ZONE	DATE	CHANGES

UNLESS OTHERWISE SPECIFIED

PROJECTION:

TOLERANCES		
	X.X ± 0.1	FRAC. ± 1/64
	X.XX ± 0.03	Angles ± 0.5°
	X.XXX ± 0.010	FINISH 125

DO NOT SCALE PRINT

THREADS ARE CLASS 2
CHAMFER ENDS OF ALL SCREW TREADS 30°
CUT ROUND, 1.5 THREAD RELIEF ON MACHINED THREADS
BREAK EDGES .016 MAX. ON MACHINED WORK
REMOVE BURRS, WELD SPLATTER & LOOSE SCALE
IN ACCORDANCE WITH ASME Y14.5M & B46.1

SHOP ORDERS

ACCT NO.	NO. REQD	SER NO.	-
DEL TO		DATE ISSD	-
		DATE REQD	-
SURFACE TREATMT			
IDENT METHOD	TAG		
PROJECT NUMBER			
PROJECT NAME			
DWG BY	Allan DeMello	DATE	18-Dec-00
CHK BY	D. Oshatz	DATE	
APR BY	D. Oshatz	DATE	

ERNEST ORLANDO LAWRENCE
BERKELEY NATIONAL LABORATORY
UNIVERSITY OF CALIFORNIA - BERKELEY

SNS - FES MEBT
CHOPPER TARGET
VIEWPORT, 4.5" CONFLAT FLANGE

MICROFILMED:	DWG. TYPE	SHOWN ON	SCALE: 1/1	DO NOT SCALE PRINTS
	PART	25B402	SHEET 1 OF 1	
PATENT CLEAR:	DESIGN ACCT. NO.	CATEGORY CODE	DWG. NO.	SIZE / REV.
	-	FE3312	25B4042	A

Rev. 1/29/2000 J. R. Osborn

Dwg. File: 25B404 Model File: 25B404

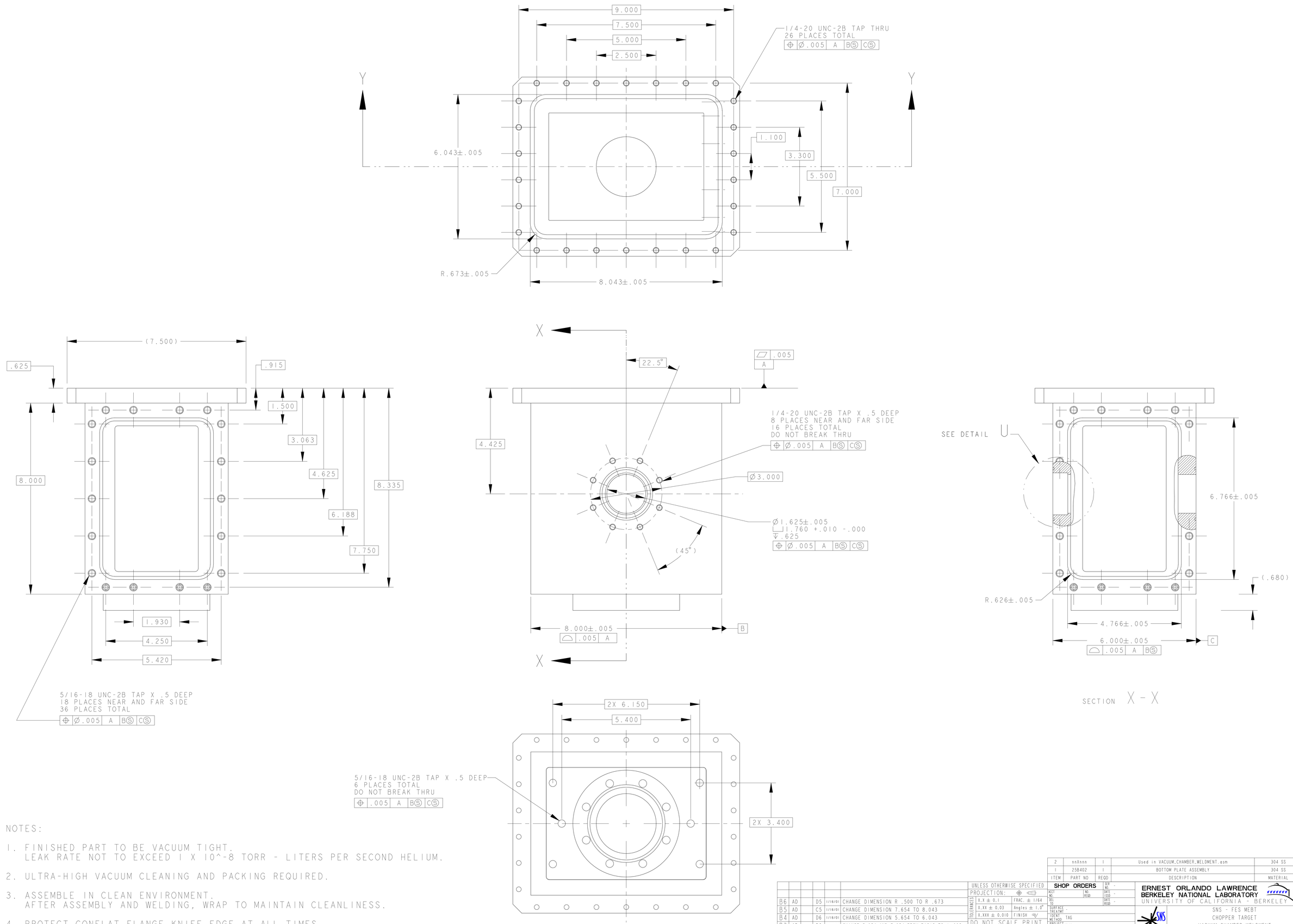

NOTES:

1. FINISHED PART TO BE VACUUM TIGHT.
   LEAK RATE NOT TO EXCEED 1 X 10^-8 TORR - LITERS PER SECOND HELIUM.
2. ULTRA-HIGH VACUUM CLEANING AND PACKING REQUIRED.
3. ASSEMBLE IN CLEAN ENVIRONMENT.
   AFTER ASSEMBLY AND WELDING, WRAP TO MAINTAIN CLEANLINESS.
4. PROTECT CONFLAT FLANGE KNIFE EDGE AT ALL TIMES.

ITEM	PART NO	REQD	DESCRIPTION	MATERIAL
2	nnXnnn	1	Used in VACUUM_CHAMBER_WELDMENT.asm	304 SS
1	25B402	1	BOTTOM PLATE ASSEMBLY	304 SS

REV	DWG	CHK	ZONE	DATE	CHANGES
B6	AD		D5	1/16/01	CHANGE DIMENSION R .500 TO R .673
B5	AD		C5	1/16/01	CHANGE DIMENSION 7.654 TO 8.043
B4	AD		D6	1/16/01	CHANGE DIMENSION 5.654 TO 6.043
B3	AD		D6	1/16/01	CHANGE 5.654 AND 7.654 FROM BASIC TO ±.005
B2	AD		B1	1/16/01	CHANGE DIMENSION 6.554 TO 6.766
B1	AD		B2	1/16/01	ADD 4.766 & R .626 DIMENSIONS
A				1/24/01	RELEASE FOR QUOTE

UNLESS OTHERWISE SPECIFIED
PROJECTION: ⌖
TOLERANCES: X.X ± 0.1 FRAC. ± 1/64; X.XX ± 0.03 Angles ± 1.0°; X.XXX ± 0.010 FINISH 125
DO NOT SCALE PRINT
THREADS ARE CLASS 2
CHAMFER ENDS OF ALL SCREW THREADS 30°
CUT ROUND, 1.5 THREAD RELIEF ON MACHINED THREADS
BREAK EDGES .016 MAX. ON MACHINED WORK
REMOVE BURRS, WELD SPLATTER & LOOSE SCALE
IN ACCORDANCE WITH ASME Y14.5M & B46.1

SHOP ORDERS
ACCT NO. | NO. REQD | DATE ISSD -
DEL TO | DATE REQD -
SURFACE TREATMT -
IDENT METHOD TAG
PROJECT NUMBER N/A
PROJECT NAME N/A
DWG BY Allan DeMello DATE 22-Jan-01
CHK BY D. Oshatz DATE
APR BY D. Oshatz DATE

ERNEST ORLANDO LAWRENCE
BERKELEY NATIONAL LABORATORY
UNIVERSITY OF CALIFORNIA - BERKELEY
SNS - FES MEBT
CHOPPER TARGET
VACUUM CHAMBER WELDMENT

MICROFILMED: | DWG. TYPE ASSEM | SHOWN ON 25B400 | SCALE: 3/4 | DO NOT SCALE PRINTS
PATENT CLEAR: | DESIGN ACCT. NO. - | CATEGORY CODE FE3312 | DWG. NO. 25B4056 | SIZE B | REV. B
SHEET 1 OF 2

DWG. NO. 25B4056 SIZE B REV. 1

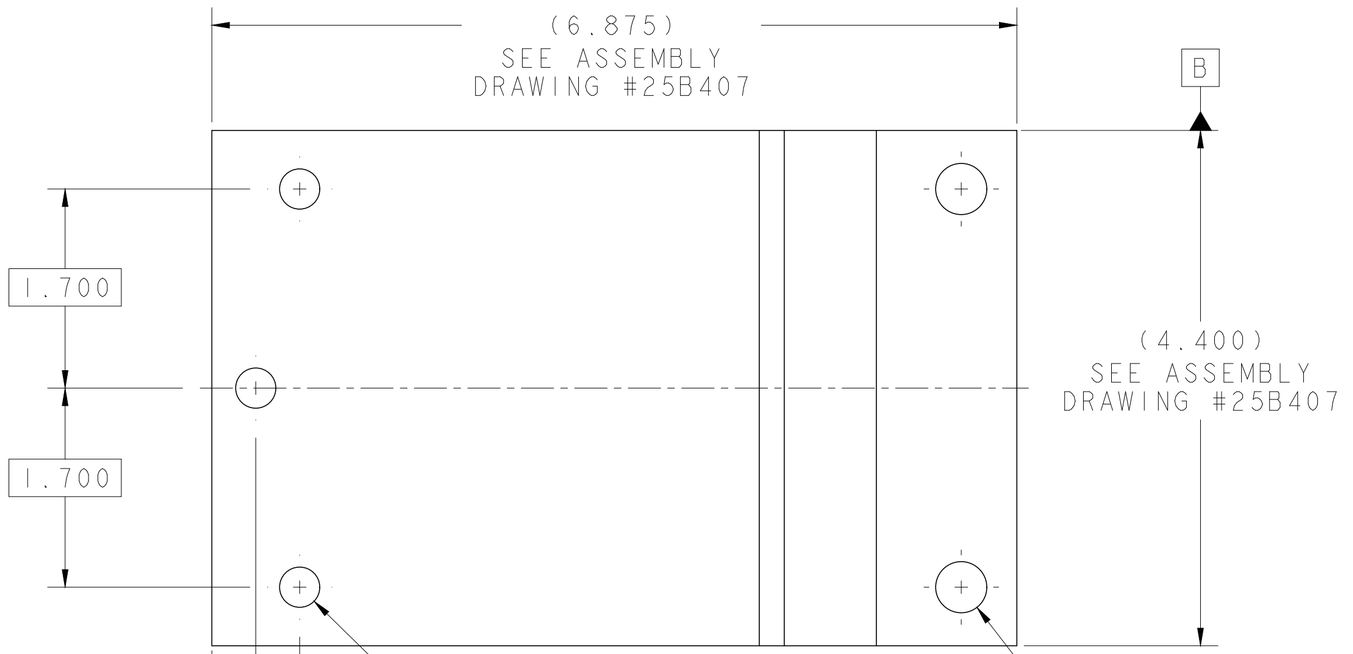

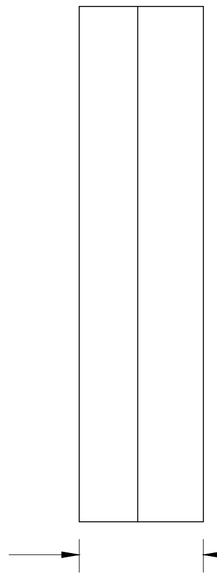

(1.060)

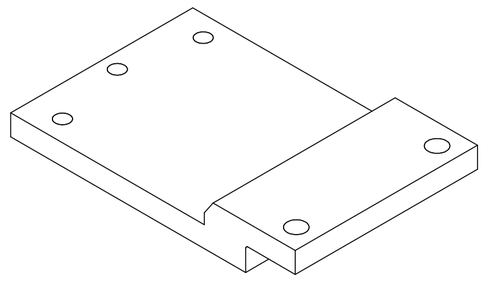

SCALE 1/2

-	304 SS	-
DESCRIPTION	MATERIAL	MAT. LOCATION

REV	DWG	CHK	ZONE	DATE	CHANGES

UNLESS OTHERWISE SPECIFIED

PROJECTION:

TOLERANCES		
	X.X ± 0.1	FRAC. ± 1/64
	X.XX ± 0.03	Angles ± 1.0°
	X.XXX ± 0.010	FINISH 125

DO NOT SCALE PRINT

THREADS ARE CLASS 2
CHAMFER ENDS OF ALL SCREW TREADS 30°
CUT ROUND, 1.5 THREAD RELIEF ON MACHINED THREADS
BREAK EDGES .016 MAX. ON MACHINED WORK
REMOVE BURRS, WELD SPLATTER & LOOSE SCALE
IN ACCORDANCE WITH ASME Y14.5M & B46.1

SHOP ORDERS

ACCT NO.	NO. REQD	SER NO.	-
DEL TO		DATE ISSD	-
SURFACE TREATMT	-	DATE REQD	-
IDENT METHOD	TAG		
PROJECT NUMBER	na		
PROJECT NAME	N/A		
DWG BY	Allan DeMello	DATE	02-Jan-01
CHK BY	D. Oshatz	DATE	
APR BY	D. Oshatz	DATE	

ERNEST ORLANDO LAWRENCE
BERKELEY NATIONAL LABORATORY
UNIVERSITY OF CALIFORNIA - BERKELEY

SNS - FES MEBT
CHOPPER TARGET
VACUUM CHAMBER - MOUNTING PLATE

MICROFILMED:	DWG. TYPE	SHOWN ON	SCALE: 1/1	DO NOT SCALE PRINTS
	PART	25B400	SHEET 1 OF 1	
PATENT CLEAR:	DESIGN ACCT. NO.	CATEGORY CODE	DWG. NO.	SIZE / REV.
	-	FE3312	25B4063	A

DWG. NO. 25B4063 SIZE A REV. SH. 1

Dwg. File: 25B406 Model File: 25B406

Rev: 1/31/2000 J. E. Kabrel

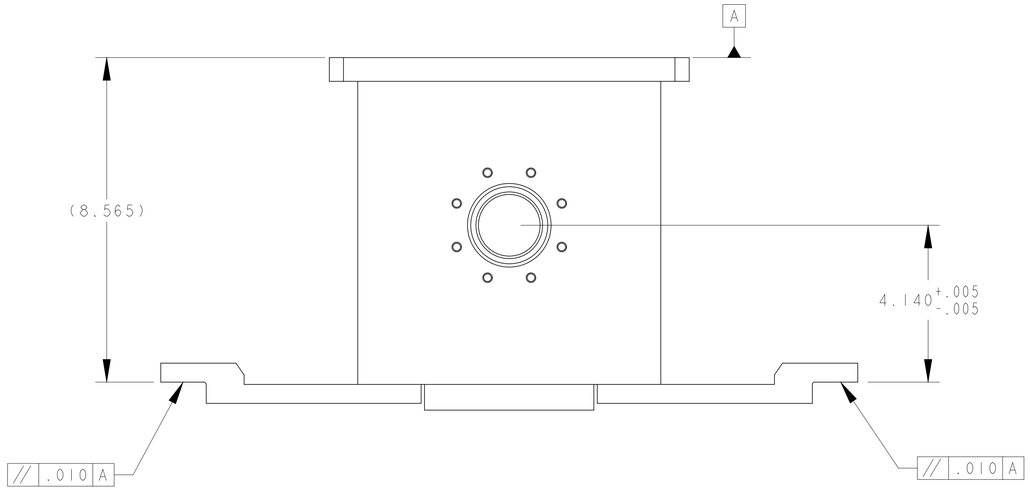

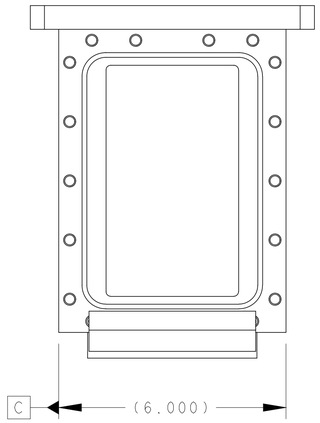

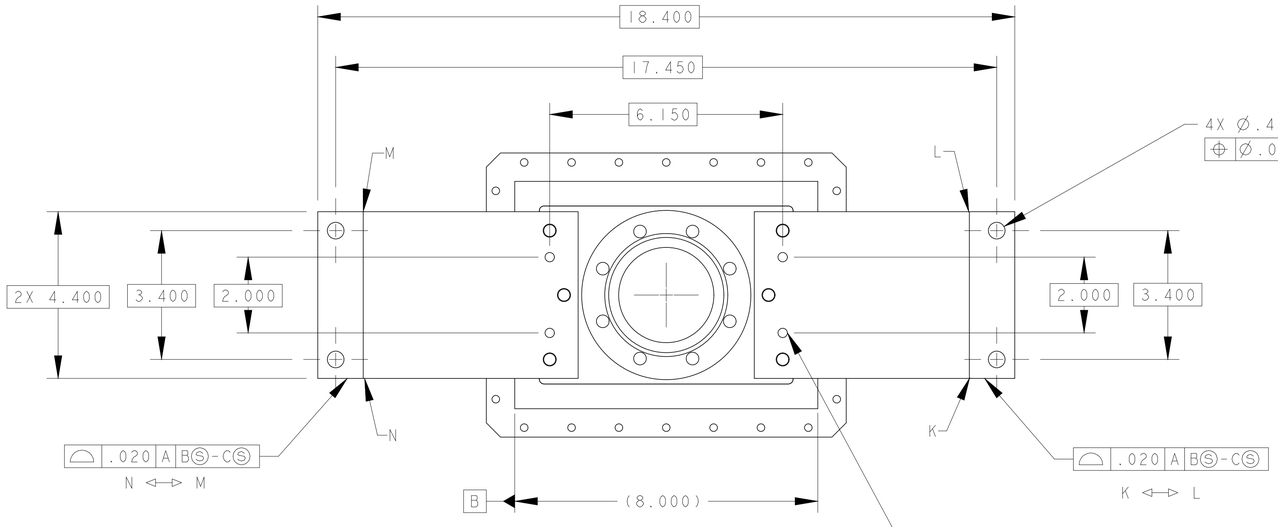

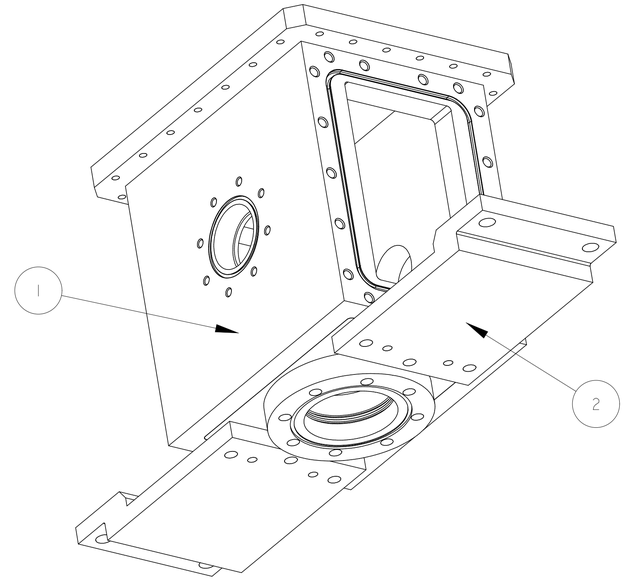

ITEM	PART NO	REQD	DESCRIPTION	MATERIAL
2	25B406	2	VACUUM CHAMBER - MOUNTING PLATE	304 SS
1	25B405	1	VACUUM CHAMBER WELDMENT	304 SS

REV	DWG	CHK	ZONE	DATE	CHANGES

UNLESS OTHERWISE SPECIFIED
PROJECTION:
TOLERANCES: X.X ± 0.1 FRAC. ± 1/64; X.XX ± 0.03 Angles ± 1.0°; X.XXX ± 0.010 FINISH 125
DO NOT SCALE PRINT
THREADS ARE CLASS 2
CHAMFER ENDS OF ALL SCREW TREADS 30°
CUT ROUND, 1.5 THREAD RELIEF ON MACHINED THREADS
BREAK EDGES .016 MAX. ON MACHINED WORK
REMOVE BURRS, WELD SPLATTER & LOOSE SCALE
IN ACCORDANCE WITH ASME Y14.5M & B46.1

SHOP ORDERS

ACCT NO.	NO. REQD	SER NO.	-
DEL TO		DATE ISSD	-
SURFACE TREATMT	-	DATE REQD	-
IDENT METHOD	TAG		
PROJECT NUMBER	na		
PROJECT NAME	N/A		
DWG BY	Allan DeMello	DATE	21-Dec-00
CHK BY	D. Oshatz	DATE	
APR BY	D. Oshatz	DATE	

ERNEST ORLANDO LAWRENCE
BERKELEY NATIONAL LABORATORY
UNIVERSITY OF CALIFORNIA - BERKELEY

SNS - FES MEBT
CHOPPER TARGET
VACUUM CHAMBER LOWER ASSEMBLY

MICROFILMED:	DWG. TYPE	SHOWN ON	SCALE: 1/2	DO NOT SCALE PRINTS
	ASSEM	25B400	SHEET 1 OF 1	
PATENT CLEAR:	DESIGN ACCT. NO.	CATEGORY CODE	DWG. NO.	SIZE / REV.
	-	FE3312	25B4074	A

Dwg. File: 25B4074.Model_File: 25B397

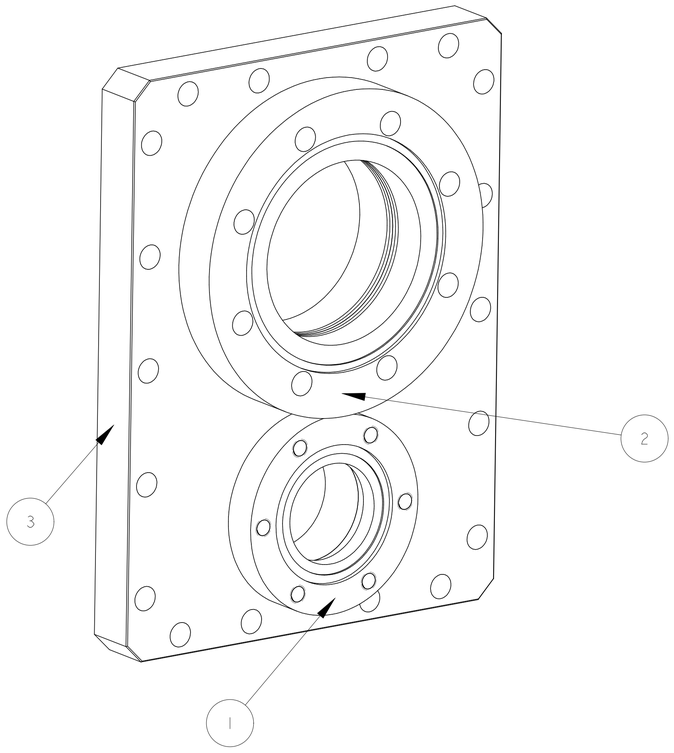

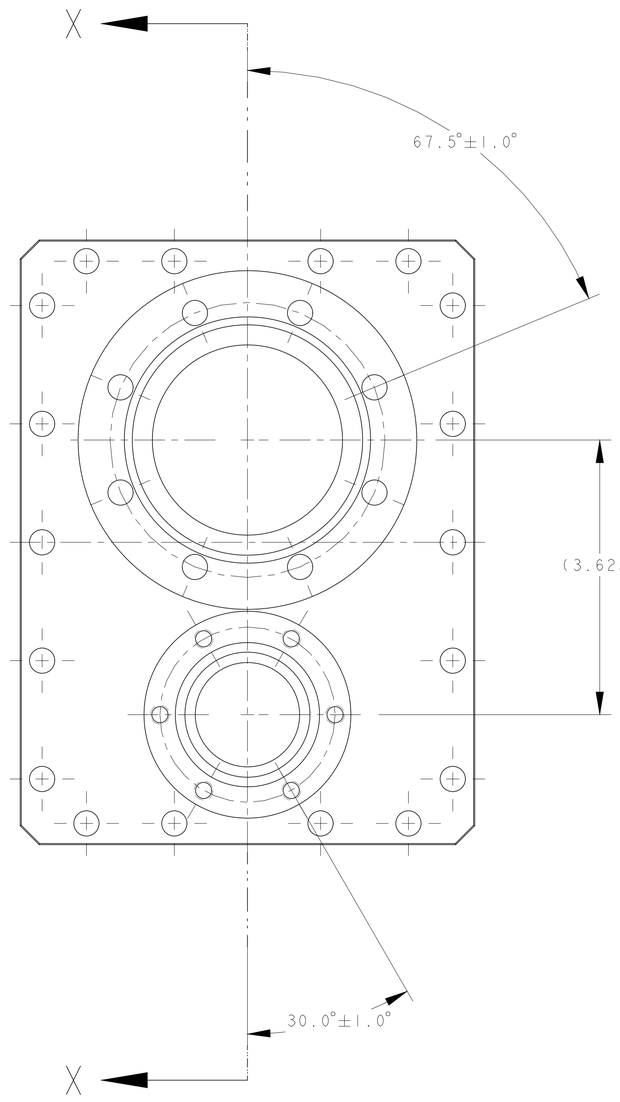

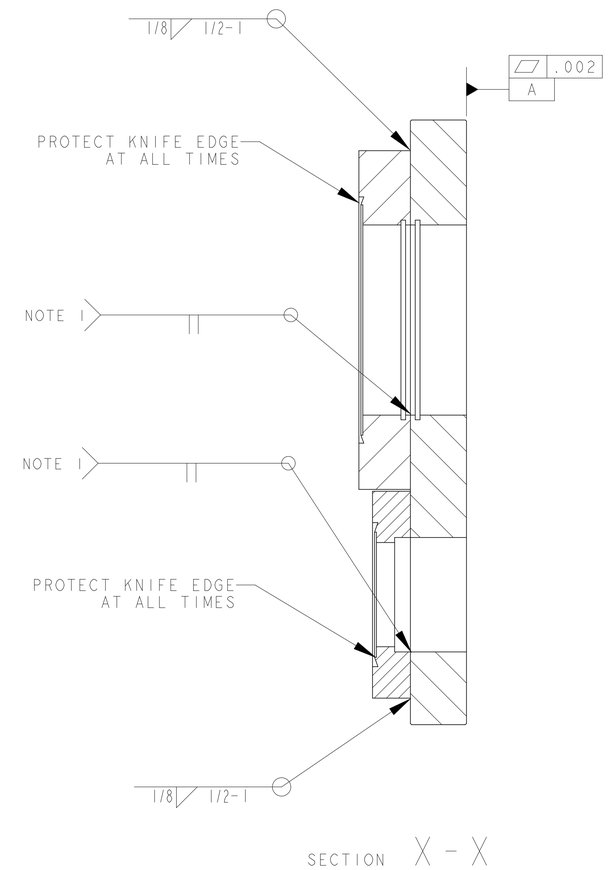

NOTES:

1. FINISHED PART TO BE VACUUM TIGHT.
   LEAK RATE NOT TO EXCEED 1 X 10^-8 TORR - LITERS PER SECOND HELIUM.
2. ULTRA-HIGH VACUUM CLEANING AND PACKING REQUIRED.
3. ASSEMBLE IN CLEAN ENVIRONMENT.
   AFTER ASSEMBLY AND WELDING, WRAP TO MAINTAIN CLEANLINESS.
4. PROTECT CONFLAT FLANGE KNIFE EDGE AT ALL TIMES.

ITEM	PART NO	REQD	DESCRIPTION	MATERIAL
3	25B409	1	VACUUM CHAMBER - VIEW PORT FLANGE	304 SS
2	25B404	1	VIEWPORT, 4.5" CONFLAT FLANGE	304 SS
1		1	2 3/4" VIEWPORT - MDC 130014 OR EQUIV.	304 SS

REV	DWG	CHK	ZONE	DATE	CHANGES

UNLESS OTHERWISE SPECIFIED
PROJECTION:

TOLERANCES		
	X.X ± 0.1	FRAC. ± 1/64
	X.XX ± 0.03	Angles ± 1.0°
	X.XXX ± 0.010	FINISH 125/

DO NOT SCALE PRINT
THREADS ARE CLASS 2
CHAMFER ENDS OF ALL SCREW TREADS 30°
CUT ROUND, 1.5 THREAD RELIEF ON MACHINED THREADS
BREAK EDGES .016 MAX. ON MACHINED WORK
REMOVE BURRS, WELD SPLATTER & LOOSE SCALE
IN ACCORDANCE WITH ASME Y14.5M & B46.1

SHOP ORDERS
ACCT NO. | NO. REQD 2 | SER NO. - | DATE ISSD -
DEL TO | DATE REQD -
SURFACE TREATMT -
IDENT METHOD TAG
PROJECT NUMBER na
PROJECT NAME N/A
DWG BY Allan Demello | DATE 04-Dec-00
CHK BY D. Oshatz | DATE
APR BY D. Oshatz | DATE

ERNEST ORLANDO LAWRENCE
BERKELEY NATIONAL LABORATORY
UNIVERSITY OF CALIFORNIA - BERKELEY

SNS - FES MEBT
CHOPPER TARGET
VIEW PORT FLANGE WELDMENT

MICROFILMED:
PATENT CLEAR:

DWG. TYPE	SHOWN ON	SCALE: 1/1	DO NOT SCALE PRINTS
ASSEM	25B400	SHEET 1 OF 1	
DESIGN ACCT. NO.	CATEGORY CODE	DWG. NO.	SIZE / REV.
-	FE3312	25B4084	A

Dwg. File: 25B400 Model File: 25B400

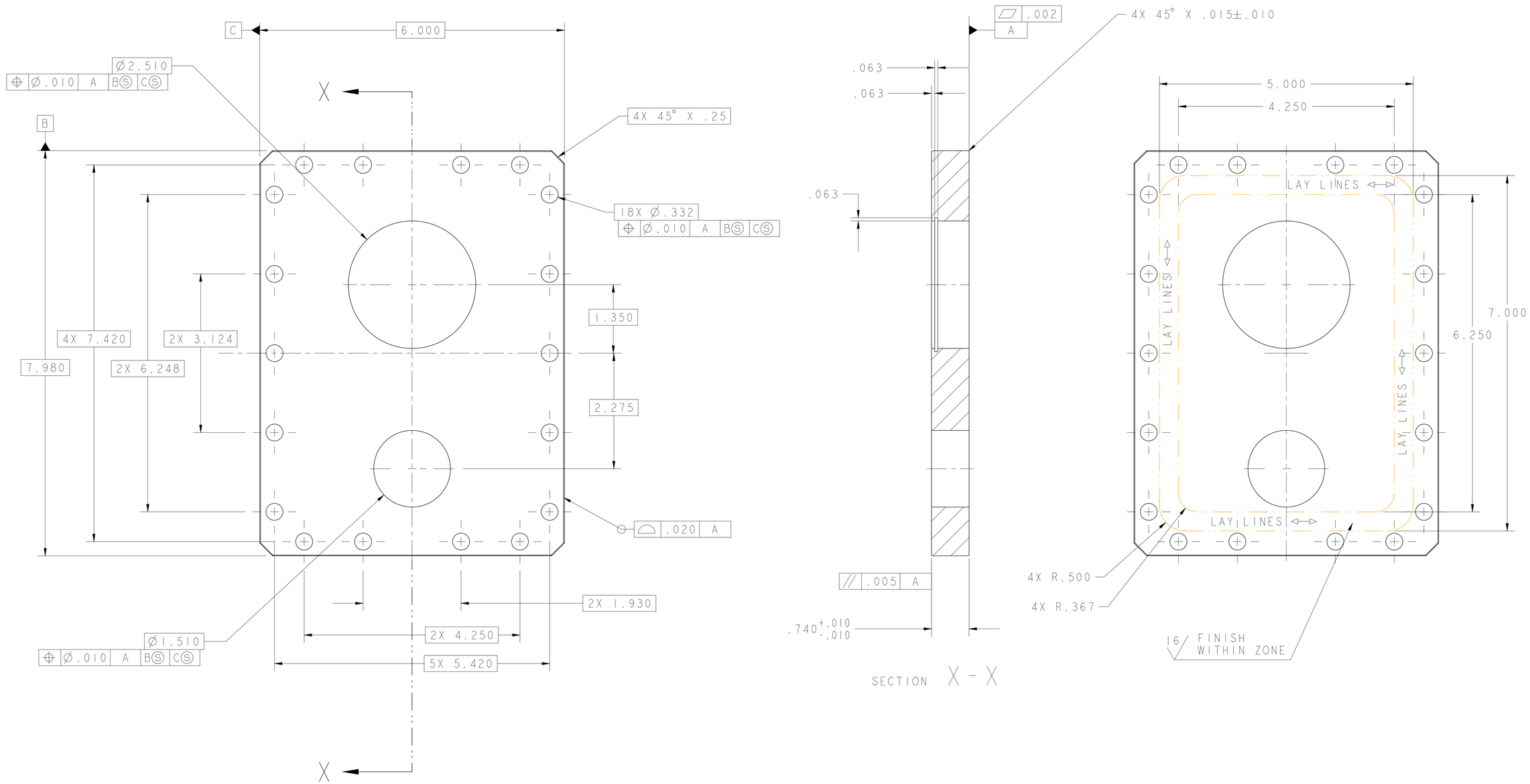

B3			C1	1/16/01	ADD DOUBLE ARROW TO LAYOUT NOTE
B2			C1	1/16/01	CHANGE 6.375 TO 6.250
B1			D2	1/16/01	CHANGE 4.375 TO 4.250
A				1/04/01	RELEASE FOR QUOTE
REV	DWG	CHK	ZONE	DATE	CHANGES

UNLESS OTHERWISE SPECIFIED
PROJECTION:

TOLERANCES		
	X.X ± 0.1	FRAC. ± 1/64
	X.XX ± 0.03	Angles ± 1.0°
	X.XXX ± 0.010	FINISH 125

DO NOT SCALE PRINT
THREADS ARE CLASS 2
CHAMFER ENDS OF ALL SCREW TREADS 30°
CUT ROUND, 1.5 THREAD RELIEF ON MACHINED THREADS
BREAK EDGES .016 MAX. ON MACHINED WORK
REMOVE BURRS, WELD SPLATTER & LOOSE SCALE
IN ACCORDANCE WITH ASME Y14.5M & B46.1

-		304 SS	-
DESCRIPTION		MATERIAL	MAT. LOCATION

SHOP ORDERS

ACCT NO.	NO. REQD	SER NO.	-
DEL TO		DATE ISSD	-
SURFACE TREATMT	-	DATE REQD	-
IDENT METHOD	TAG		
PROJECT NUMBER	na		
PROJECT NAME	N/A		
DWG BY	Allan DeMello	DATE	22-Jan-01
CHK BY	D.Oshatz	DATE	
APR BY	D.Oshatz	DATE	

ERNEST ORLANDO LAWRENCE
BERKELEY NATIONAL LABORATORY
UNIVERSITY OF CALIFORNIA - BERKELEY

SNS - FES MEBT
CHOPPER TARGET
VACUUM CHAMBER - VIEW PORT FLANGE

MICROFILMED:	DWG. TYPE	SHOWN ON	SCALE: 1/1	DO NOT SCALE PRINTS
	PART	25B408	SHEET 1 OF 1	
PATENT CLEAR:	DESIGN ACCT. NO.	CATEGORY CODE	DWG. NO.	SIZE / REV.
	-	FE3312	25B4094	B

Dwg. File: 25B409 Model File: 25B409

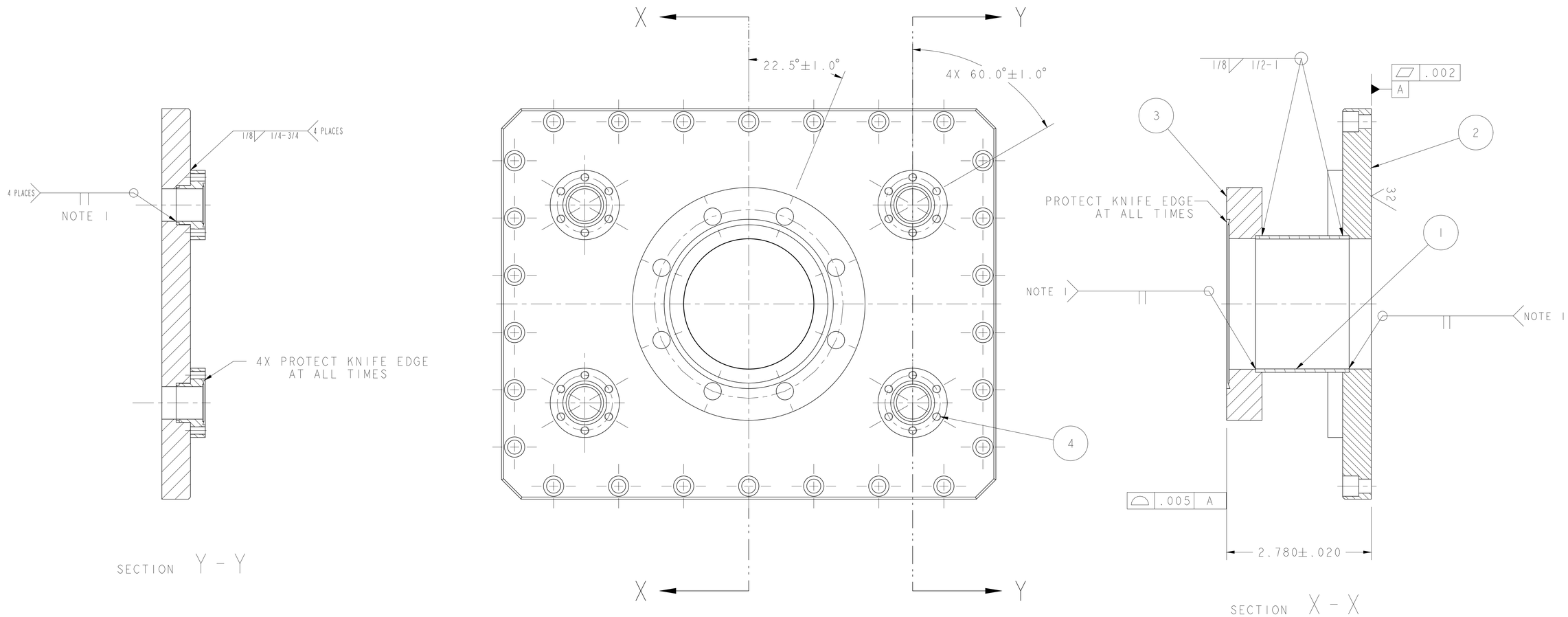

NOTES:

1. FINISHED PART TO BE VACUUM TIGHT.
   LEAK RATE NOT TO EXCEED 1 X 10^-8 TORR - LITERS PER SECOND HELIUM.
2. ULTRA-HIGH VACUUM CLEANING AND PACKING REQUIRED.
3. ASSEMBLE IN CLEAN ENVIRONMENT.
   AFTER ASSEMBLY AND WELDING, WRAP TO MAINTAIN CLEANLINESS.
4. PROTECT CONFLAT FLANGE KNIFE EDGE AT ALL TIMES.

ITEM	PART NO	REQD	DESCRIPTION	MATERIAL
4	MDC F133075T	4	MINI-CONFLAT FLANGE	304 SS
3	25B412	1	TARGET FEEDTHRU PORT - CONFLAT FLANGE	304 SS
2	25B411	1	VACUUM CHAMBER - TARGET ACTUATOR FLANGE	304 SS
1	-	1	TARGET FEEDTHRU PORT - TUBE, 2.625 OD X .065 WALL	304 SS

REV	DWG	CHK	ZONE	DATE	CHANGES

UNLESS OTHERWISE SPECIFIED
PROJECTION:

TOLERANCES		
	X.X ± 0.1	FRAC. ± 1/64
	X.XX ± 0.03	Angles ± 1.0°
	X.XXX ± 0.010	FINISH 125

DO NOT SCALE PRINT
THREADS ARE CLASS 2
CHAMFER ENDS OF ALL SCREW TREADS 30°
CUT ROUND, 1.5 THREAD RELIEF ON MACHINED THREADS
BREAK EDGES .016 MAX. ON MACHINED WORK
REMOVE BURRS, WELD SPLATTER & LOOSE SCALE
IN ACCORDANCE WITH ASME Y14.5M & B46.1

SHOP ORDERS
ACCT NO. | NO. REQD | SER NO. - | DATE ISSD -
DEL TO | DATE REQD -
SURFACE TREATMT -
IDENT METHOD TAG
PROJECT NUMBER na
PROJECT NAME N/A
DWG BY Allan DeMello | DATE 05-Dec-00
CHK BY D. Oshatz | DATE
APR BY D. Oshatz | DATE

ERNEST ORLANDO LAWRENCE
BERKELEY NATIONAL LABORATORY
UNIVERSITY OF CALIFORNIA - BERKELEY

SNS - FES MEBT
CHOPPER TARGET
VACUUM CHAMBER - TARGET ACTUATOR FLANGE WELDMENT

MICROFILMED:	DWG. TYPE	SHOWN ON	SCALE: 1/1	DO NOT SCALE PRINTS
	ASSEM	25B400	SHEET 1 OF 1	
PATENT CLEAR:	DESIGN ACCT. NO.	CATEGORY CODE	DWG. NO.	SIZE / REV.
	-	FE3312	25B4104	A

Dwg. File: 25B4104 Model File: 25B4104

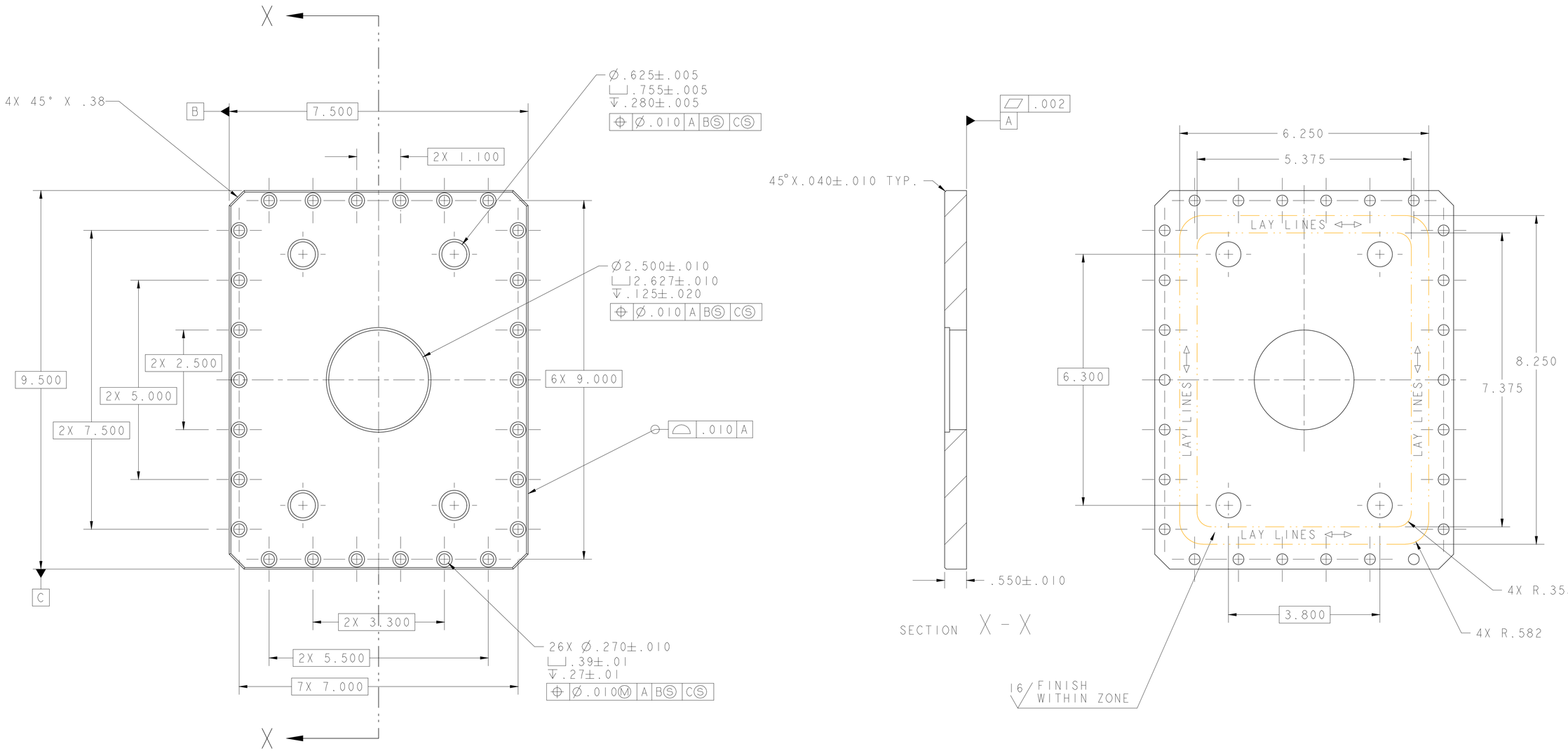

B3			C1	1/16/01	ADD DOUBLE ARROWS TO LAYLINE NOTE
B2			C1	1/16/01	CHANGE 8.125 TO 8.250
B1			D2	1/16/01	CHANGE 6.125 TO 6.250
A				1/04/01	RELEASE FOR QUOTE
REV	DWG	CHK	ZONE	DATE	CHANGES

UNLESS OTHERWISE SPECIFIED
PROJECTION:

TOLERANCES		
	X.X ± 0.1	FRAC. ± 1/64
	X.XX ± 0.03	Angles ± 1.0°
	X.XXX ± 0.010	FINISH 125

DO NOT SCALE PRINT
THREADS ARE CLASS 2
CHAMFER ENDS OF ALL SCREW TREADS 30°
CUT ROUND, 1.5 THREAD RELIEF ON MACHINED THREADS
BREAK EDGES .016 MAX. ON MACHINED WORK
REMOVE BURRS, WELD SPLATTER & LOOSE SCALE
IN ACCORDANCE WITH ASME Y14.5M & B46.1

DESCRIPTION	MATERIAL	MAT. LOCATION
-	304 SS	-

SHOP ORDERS
ACCT NO. | NO. REQD | SER NO. -
DEL TO | DATE ISSD -
DATE REQD -
SURFACE TREATMT -
IDENT METHOD TAG
PROJECT NUMBER na
PROJECT NAME N/A
DWG BY Allan DeMello | DATE 13-Dec-00
CHK BY D. Oshatz | DATE
APR BY D. Oshatz | DATE

ERNEST ORLANDO LAWRENCE
BERKELEY NATIONAL LABORATORY
UNIVERSITY OF CALIFORNIA - BERKELEY

SNS - FES MEBT
CHOPPER TARGET
VACUUM CHAMBER - TARGET ACTUATOR FLANGE

MICROFILMED:
PATENT CLEAR:
DWG. TYPE: PART
SHOWN ON: 25B410
SCALE: 3/4
DO NOT SCALE PRINTS
SHEET 1 OF 1
DESIGN ACCT. NO.: -
CATEGORY CODE: FE3312
DWG. NO.: 25B4114
SIZE: B
REV.: B

DWG. NO.	SIZE	REV.	SH.
25B4122	A	1	

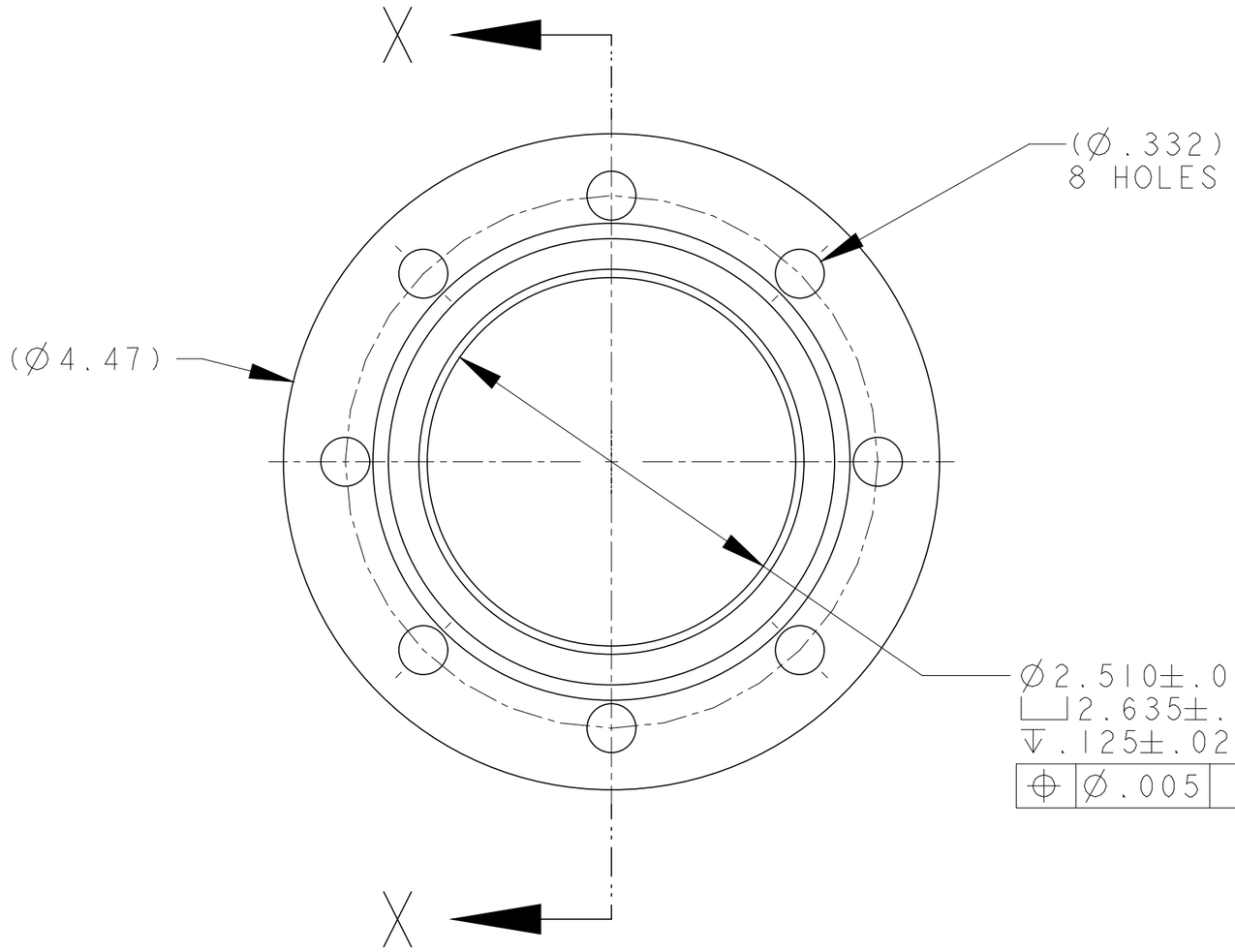

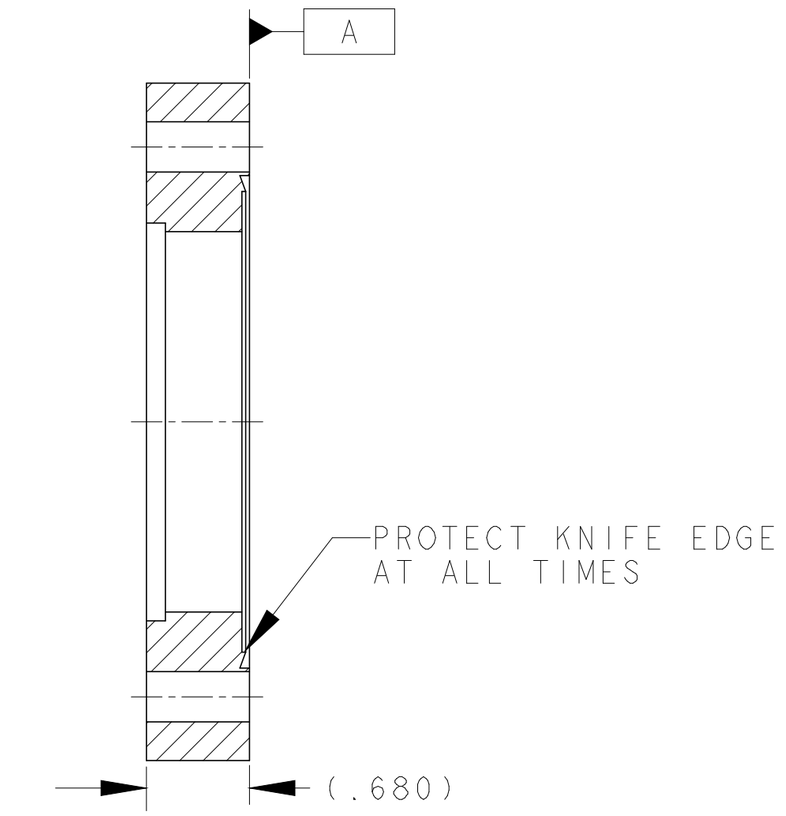

SECTION X - X

MDC PN 110021 OR EQUIV.	304 SS	-
DESCRIPTION	MATERIAL	MAT. LOCATION

REV	DWG	CHK	ZONE	DATE	CHANGES
A					RELEASE FOR QUOTE

UNLESS OTHERWISE SPECIFIED

PROJECTION:

TOLERANCES		
	X.X ± 0.1	FRAC. ± 1/64
	X.XX ± 0.03	Angles ± 0.5°
	X.XXX ± 0.010	FINISH 125

DO NOT SCALE PRINT

THREADS ARE CLASS 2
CHAMFER ENDS OF ALL SCREW TREADS 30°
CUT ROUND, 1.5 THREAD RELIEF ON MACHINED THREADS
BREAK EDGES .016 MAX. ON MACHINED WORK
REMOVE BURRS, WELD SPLATTER & LOOSE SCALE
IN ACCORDANCE WITH ASME Y14.5M & B46.1

SHOP ORDERS

ACCT NO.	NO. REQD 1	SER NO.	-
DEL TO		DATE ISSD	-
SURFACE TREATMT		DATE REQD	-
IDENT METHOD TAG			
PROJECT NUMBER			
PROJECT NAME -			
DWG BY Allan DeMello		DATE 05-Dec-00	
CHK BY D. Oshatz		DATE	
APR BY D. Oshatz		DATE	

ERNEST ORLANDO LAWRENCE
BERKELEY NATIONAL LABORATORY
UNIVERSITY OF CALIFORNIA - BERKELEY

SNS - FES MEBT
CHOPPER TARGET
TARGET FEEDTHRU PORT - CONFLAT FLANGE

MICROFILMED:	DWG. TYPE	SHOWN ON	SCALE: 1/1	DO NOT SCALE PRINTS
	PART	25B4104	SHEET 1 OF 1	
PATENT CLEAR:	DESIGN ACCT. NO.	CATEGORY CODE	DWG. NO.	SIZE / REV.
	-	FE3312	25B4122	A

Rev. 1/29/2009 J. R. Osborn

Dwg. File: 25B412 Model File: 25B412

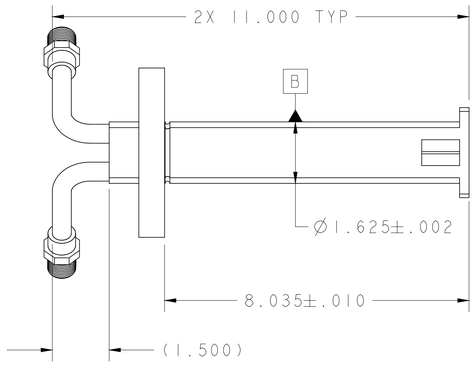

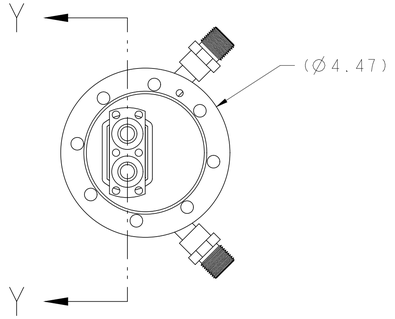

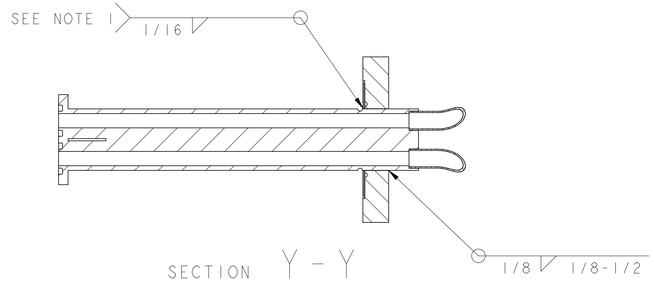

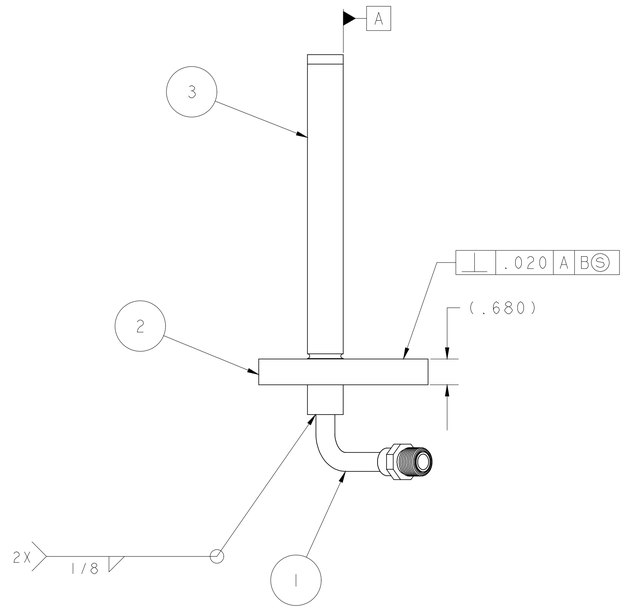

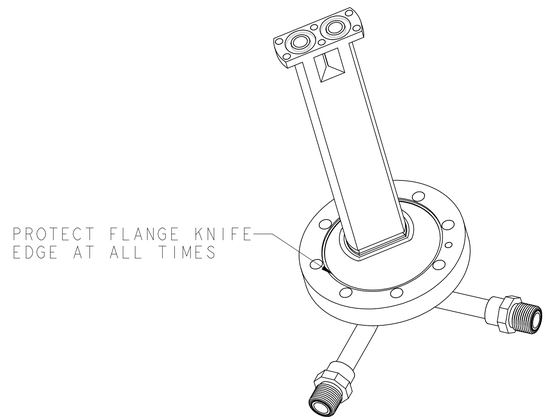

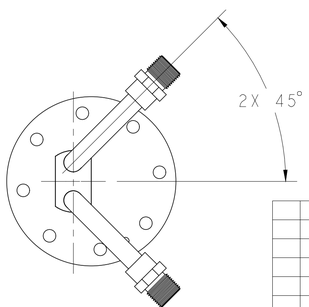

NOTES:

1. FINISHED PART TO BE VACUUM TIGHT.
   LEAK RATE NOT TO EXCEED 1 X 10^-8 TORR - LITERS PER SECOND HELIUM.
2. ULTRA-HIGH VACUUM CLEANING AND PACKING REQUIRED.
3. ASSEMBLE IN CLEAN ENVIRONMENT.
   AFTER ASSEMBLY AND WELDING, WRAP TO MAINTAIN CLEANLINESS.

ITEM	PART NO	REQD	DESCRIPTION	MATERIAL
3	25B415	1	WATER MANIFOLD INLET/OUTLET TUBE	304 SS
2	25B414	1	WATER MANIFOLD CONFLAT FLANGE	304 SS
1	25B417	2	RIGHT ANGLE COOLING TUBE	-

REV	DWG	CHK	ZONE	DATE	CHANGES
B2	AD		D7	1/22/01	CHANGE DIMENSION 9.320±.010 TO 8.035±.010
B1	AD		D7	1/22/01	CHANGE DIMENSION 2X 13.250 TYP. TO 2X 11.000 TYP.
A	AD			1/04/01	RELEASE FOR QUOTE

UNLESS OTHERWISE SPECIFIED
PROJECTION:

TOLERANCES		
	X.X ± 0.1	FRAC. ± 1/64
	X.XX ± 0.03	Angles ± 1.0°
	X.XXX ± 0.010	FINISH 125

DO NOT SCALE PRINT
THREADS ARE CLASS 2
CHAMFER ENDS OF ALL SCREW TREADS 30°
CUT ROUND, 1.5 THREAD RELIEF ON MACHINED THREADS
BREAK EDGES .016 MAX. ON MACHINED WORK
REMOVE BURRS, WELD SPLATTER & LOOSE SCALE
IN ACCORDANCE WITH ASME Y14.5M & B46.1

SHOP ORDERS
ACCT NO. | NO. REQD | SER NO. -
DEL TO | DATE ISSD -
DATE REQD -
SURFACE TREATMT
IDENT METHOD TAG
PROJECT NUMBER
PROJECT NAME
DWG BY Allan DeMello | DATE 22-Nov-00
CHK BY D. Oshatz | DATE
APR BY D. Oshatz | DATE

ERNEST ORLANDO LAWRENCE
BERKELEY NATIONAL LABORATORY
UNIVERSITY OF CALIFORNIA - BERKELEY

SNS - FES MEBT
CHOPPER TARGET
WATER MANIFOLD

MICROFILMED:
PATENT CLEAR:

DWG. TYPE	SHOWN ON	SCALE: 1/2	DO NOT SCALE PRINTS
ASSEM	25B400	SHEET 1 OF 1	
DESIGN ACCT. NO.	CATEGORY CODE	DWG. NO. 25B4134	SIZE B
-	FE3312		REV.

Dwg. File: 25B413 Model File: 25B413

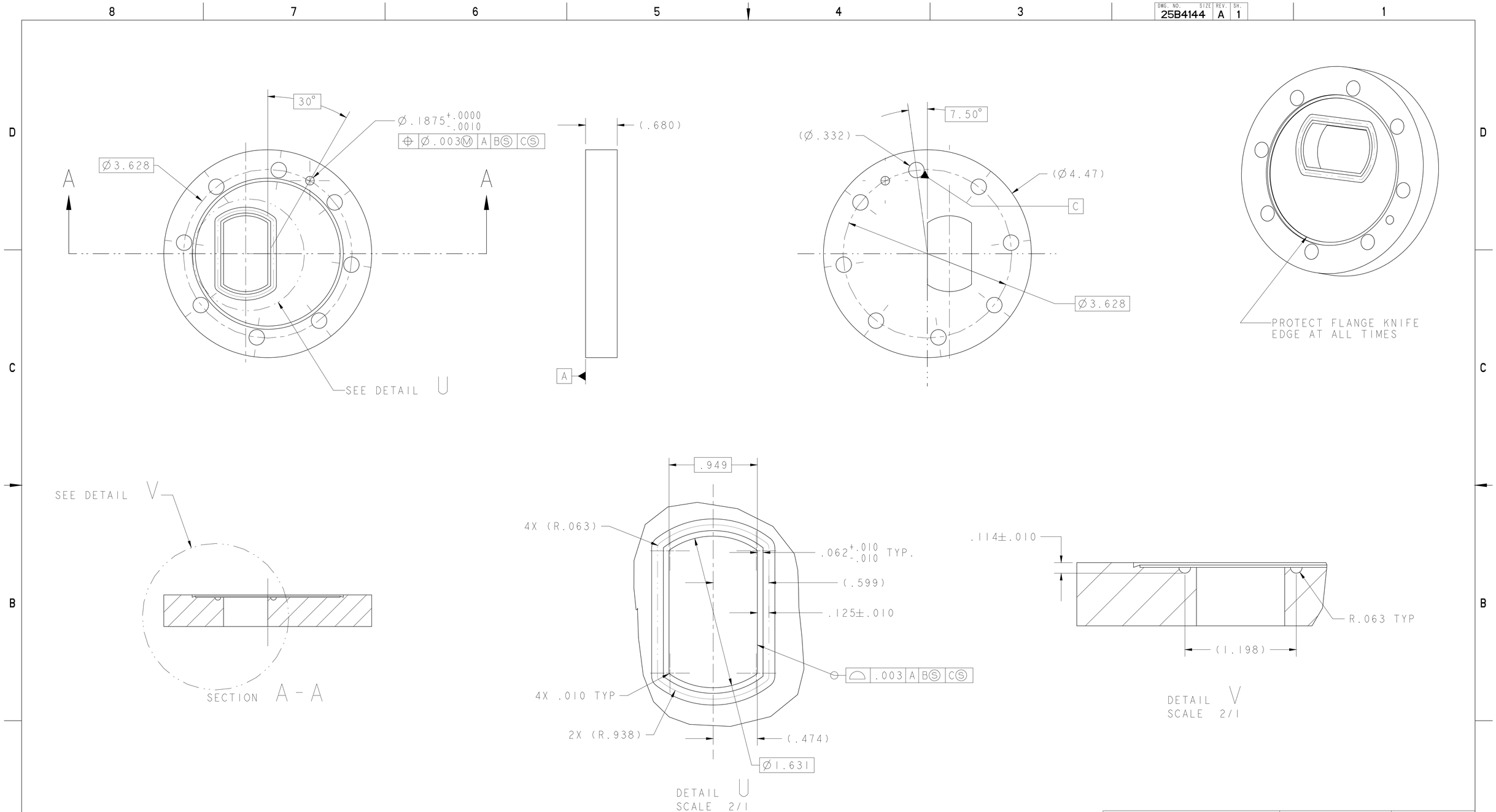

MDC PN 110018 OR EQUIV.	304 SS	-
DESCRIPTION	MATERIAL	MAT. LOCATION

REV	DWG	CHK	ZONE	DATE	CHANGES

UNLESS OTHERWISE SPECIFIED
PROJECTION:

TOLERANCES		
	X.X ± 0.1	FRAC. ± 1/64
	X.XX ± 0.03	Angles ± 1.0°
	X.XXX ± 0.010	FINISH 125

DO NOT SCALE PRINT
THREADS ARE CLASS 2
CHAMFER ENDS OF ALL SCREW TREADS 30°
CUT ROUND, 1.5 THREAD RELIEF ON MACHINED THREADS
BREAK EDGES .016 MAX. ON MACHINED WORK
REMOVE BURRS, WELD SPLATTER & LOOSE SCALE
IN ACCORDANCE WITH ASME Y14.5M & B46.1

SHOP ORDERS
ACCT NO. | NO. REQD | SER NO. -
DEL TO | DATE ISSD -
SURFACE TREATMT | DATE REQD -
IDENT METHOD TAG
PROJECT NUMBER na
PROJECT NAME
DWG BY Allan DeMello | DATE 15-Nov-00
CHK BY D. Oshatz | DATE
APR BY D. Oshatz | DATE

ERNEST ORLANDO LAWRENCE
BERKELEY NATIONAL LABORATORY
UNIVERSITY OF CALIFORNIA - BERKELEY

SNS - FES MEBT
CHOPPER TARGET
WATER MANIFOLD CONFLAT FLANGE

MICROFILMED: | DWG. TYPE PART | SHOWN ON 25B413 | SCALE: 1/1 | DO NOT SCALE PRINTS
SHEET 1 OF 1
PATENT CLEAR: | DESIGN ACCT. NO. - | CATEGORY CODE FE3312 | DWG. NO. 25B4144 | SIZE | REV. A

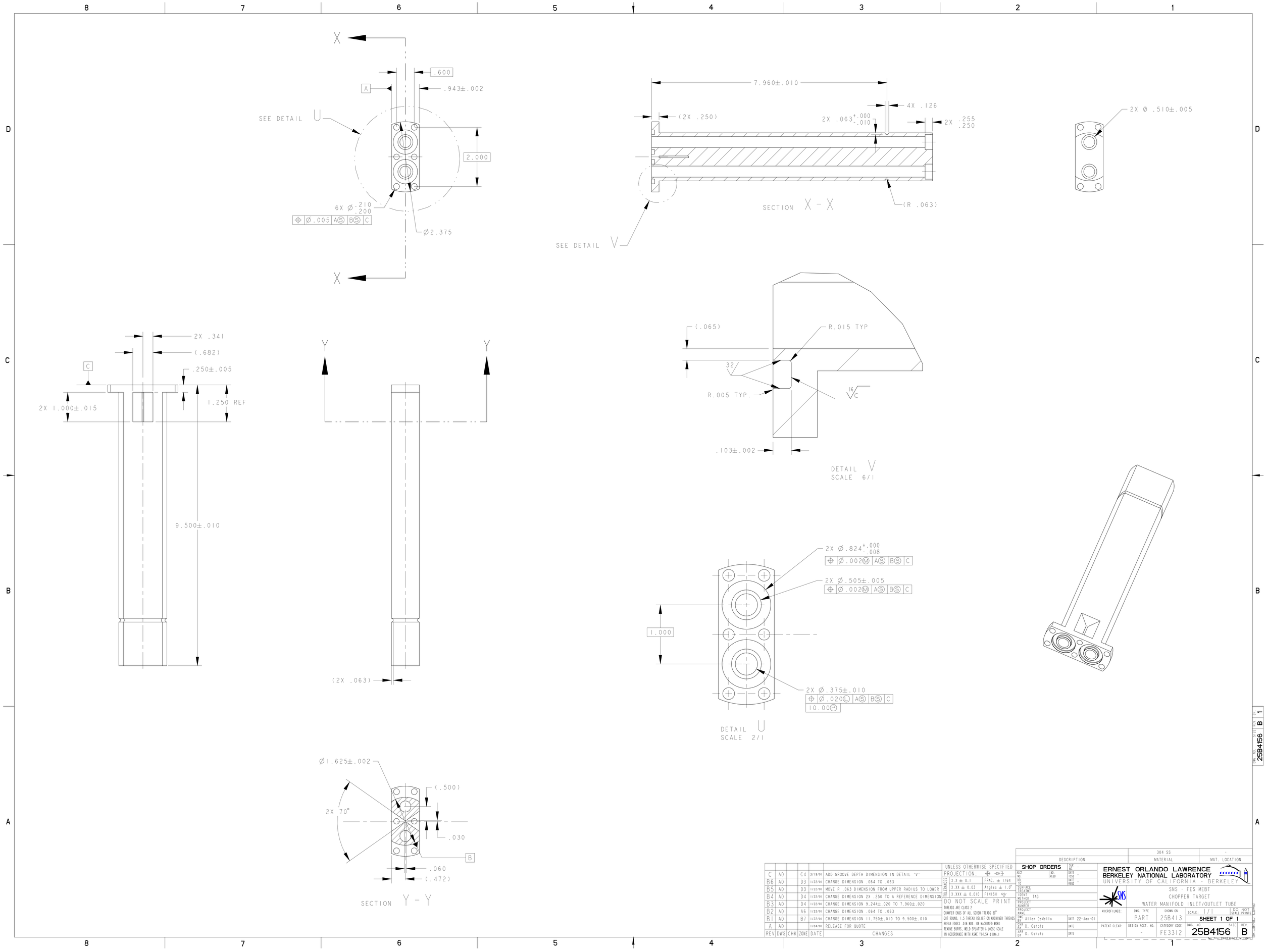

REV	DWG	CHK	ZONE	DATE	CHANGES
C	AD		C4	3/19/01	ADD GROOVE DEPTH DIMENSION IN DETAIL 'V'
B6	AD		D3	1/22/01	CHANGE DIMENSION .064 TO .063
B5	AD		D3	1/22/01	MOVE R .063 DIMENSION FROM UPPER RADIUS TO LOWER
B4	AD		D4	1/22/01	CHANGE DIMENSION 2X .250 TO A REFERENCE DIMENSION
B3	AD		D4	1/22/01	CHANGE DIMENSION 9.244±.020 TO 7.960±.020
B2	AD		A6	1/22/01	CHANGE DIMENSION .064 TO .063
B1	AD		B7	1/22/01	CHANGE DIMENSION 11.750±.010 TO 9.500±.010
A	AD			1/04/01	RELEASE FOR QUOTE

UNLESS OTHERWISE SPECIFIED
PROJECTION: ⌖ ⇦
TOLERANCES: X.X ± 0.1 | FRAC. ± 1/64 | X.XX ± 0.03 | Angles ± 1.0° | X.XXX ± 0.010 | FINISH 125
DO NOT SCALE PRINT
THREADS ARE CLASS 2
CHAMFER ENDS OF ALL SCREW TREADS 30°
CUT ROUND, 1.5 THREAD RELIEF ON MACHINED THREADS
BREAK EDGES .016 MAX. ON MACHINED WORK
REMOVE BURRS, WELD SPLATTER & LOOSE SCALE
IN ACCORDANCE WITH ASME Y14.5M & B46.1

DESCRIPTION	MATERIAL	MAT. LOCATION
	304 SS	-

SHOP ORDERS
SER NO. -
ACCT NO. | NO. REQD | DATE ISSD -
DEL TO | DATE REQD -
SURFACE TREATMT
IDENT METHOD TAG
PROJECT NUMBER
PROJECT NAME
DWG BY Allan DeMello | DATE 22-Jan-01
CHK BY D. Oshatz | DATE
APR BY D. Oshatz | DATE

ERNEST ORLANDO LAWRENCE BERKELEY NATIONAL LABORATORY
UNIVERSITY OF CALIFORNIA - BERKELEY
SNS - FES MEBT
CHOPPER TARGET
WATER MANIFOLD INLET/OUTLET TUBE

MICROFILMED: | DWG. TYPE PART | SHOWN ON 25B413 | SCALE: 1/1 | DO NOT SCALE PRINTS
PATENT CLEAR: | DESIGN ACCT. NO. - | CATEGORY CODE FE3312 | SHEET 1 OF 1
DWG. NO. 25B4156 | SIZE | REV. B

DWG. NO. 25B4156 | SIZE B | REV. 1

DWG. NO.	SIZE	REV.	SH.
25B4162	B	1	

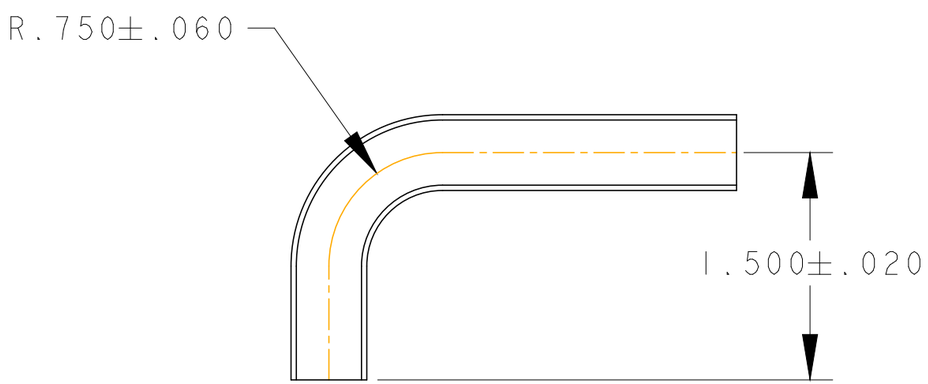

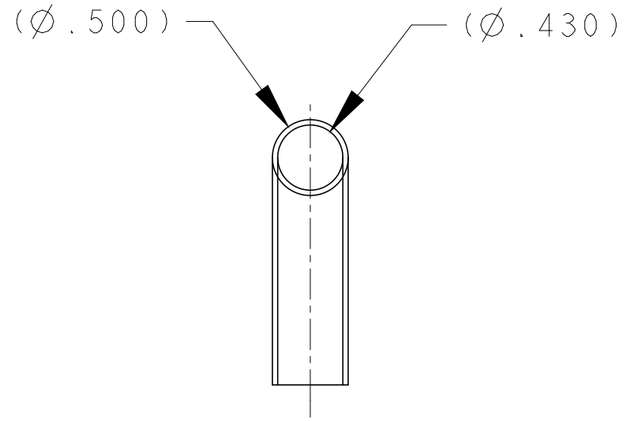

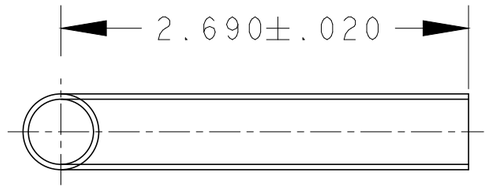

TUBE, .5 O.D. x .035 WALL	316 SS	-
DESCRIPTION	MATERIAL	MAT. LOCATION

REV	DWG	CHK	ZONE	DATE	CHANGES
B	AD			2/16/01	CHANGE MATERIAL FROM 304 SS TO 316 SS
A					INITIAL RELEASE

UNLESS OTHERWISE SPECIFIED

PROJECTION:

TOLERANCES		
	X.X ± 0.1	FRAC. ± 1/64
	X.XX ± 0.03	Angles ± 1.0°
	X.XXX ± 0.010	FINISH 125

DO NOT SCALE PRINT

THREADS ARE CLASS 2
CHAMFER ENDS OF ALL SCREW TREADS 30°
CUT ROUND, 1.5 THREAD RELIEF ON MACHINED THREADS
BREAK EDGES .016 MAX. ON MACHINED WORK
REMOVE BURRS, WELD SPLATTER & LOOSE SCALE
IN ACCORDANCE WITH ASME Y14.5M & B46.1

SHOP ORDERS

SER NO.	-		
ACCT NO.		NO. REQD	
DATE ISSD	-		
DEL TO		DATE REQD	-
SURFACE TREATMT	-		
IDENT METHOD	TAG		
PROJECT NUMBER	na		
PROJECT NAME	N/A		
DWG BY	Allan DeMello	DATE	22-Nov-00
CHK BY	D. Oshatz	DATE	
APR BY	D. Oshatz	DATE	

ERNEST ORLANDO LAWRENCE BERKELEY NATIONAL LABORATORY
UNIVERSITY OF CALIFORNIA - BERKELEY

SNS - FES MEBT
CHOPPER TARGET
RIGHT ANGLE TUBE, 1/2" O.D. x .035" WALL

MICROFILMED:	DWG. TYPE	SHOWN ON	SCALE: 1/1	DO NOT SCALE PRINTS
	PART	25B417	SHEET 1 OF 1	
PATENT CLEAR:	DESIGN ACCT. NO.	CATEGORY CODE	DWG. NO.	SIZE / REV.
	-	FE3312	25B4162	B

Dwg. File: 25B416 Model File: 25B416

Rev. 1/29/2000 J. R. Osborn

DWG. NO.	SIZE	REV.	SH.
25B4172		A	1

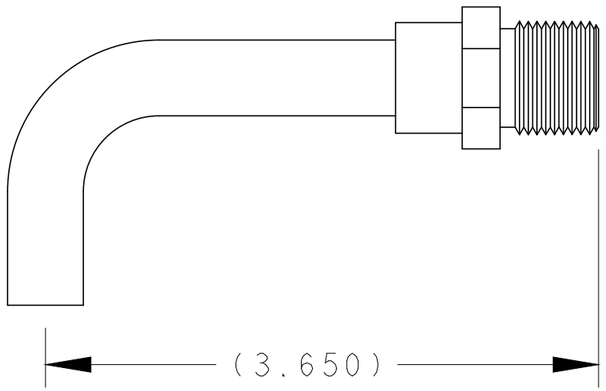

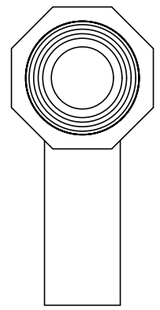

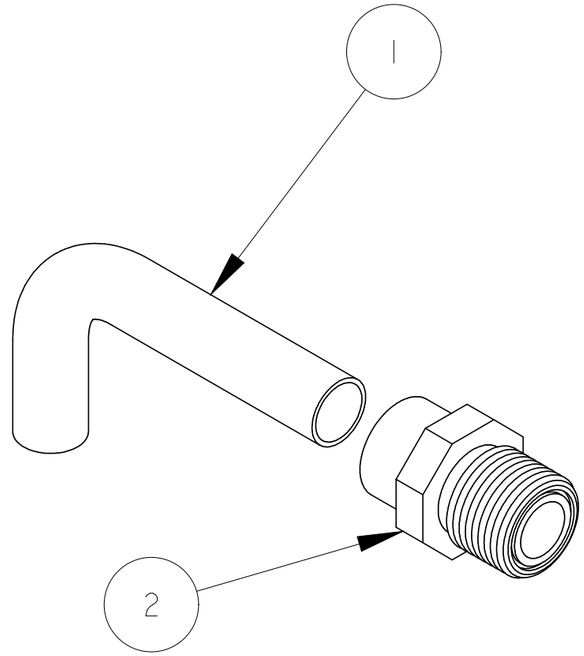

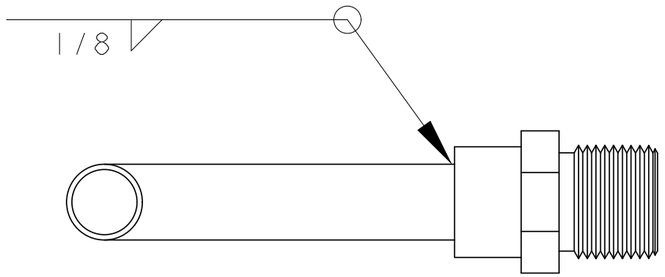

ITEM	PART NO	REQD	DESCRIPTION	MATERIAL
2	SS-8-VCO-1	1	CAJON O-RING FACE SEAL CONNECTOR	316 SS
1	25B416	1	RIGHT ANGLE TUBE, 1/2" O.D. x .035" WALL	316 SS

REV	DWG	CHK	ZONE	DATE	CHANGES
A					RELEASE FOR QUOTE

UNLESS OTHERWISE SPECIFIED

PROJECTION:

TOLERANCES		
	X.X ± 0.1	FRAC. ± 1/64
	X.XX ± 0.03	Angles ± 1.0°
	X.XXX ± 0.010	FINISH 125

DO NOT SCALE PRINT

THREADS ARE CLASS 2
CHAMFER ENDS OF ALL SCREW TREADS 30°
CUT ROUND, 1.5 THREAD RELIEF ON MACHINED THREADS
BREAK EDGES .016 MAX. ON MACHINED WORK
REMOVE BURRS, WELD SPLATTER & LOOSE SCALE
IN ACCORDANCE WITH ASME Y14.5M & B46.1

SHOP ORDERS

ACCT NO.	NO. REQD	SER NO.	-
DEL TO		DATE ISSD	-
SURFACE TREATMT	-	DATE REQD	-
IDENT METHOD	TAG		
PROJECT NUMBER	na		
PROJECT NAME	-		
DWG BY	Allan DeMello	DATE	22-Nov-00
CHK BY	D. Oshatz	DATE	
APR BY	D. Oshatz	DATE	

ERNEST ORLANDO LAWRENCE
BERKELEY NATIONAL LABORATORY
UNIVERSITY OF CALIFORNIA - BERKELEY

SNS - FES MEBT
CHOPPER TARGET
RIGHT ANGLE COOLING TUBE

MICROFILMED:	DWG. TYPE	SHOWN ON	SCALE: 1/1	DO NOT SCALE PRINTS
	ASSEM	25B413	SHEET 1 OF 1	
PATENT CLEAR:	DESIGN ACCT. NO.	CATEGORY CODE	DWG. NO.	SIZE / REV.
	-	FE3312	25B4172	A

Rev. 1/29/2000 J. R. Osborn

Dwg. File: 25B417 Model File: 25B417