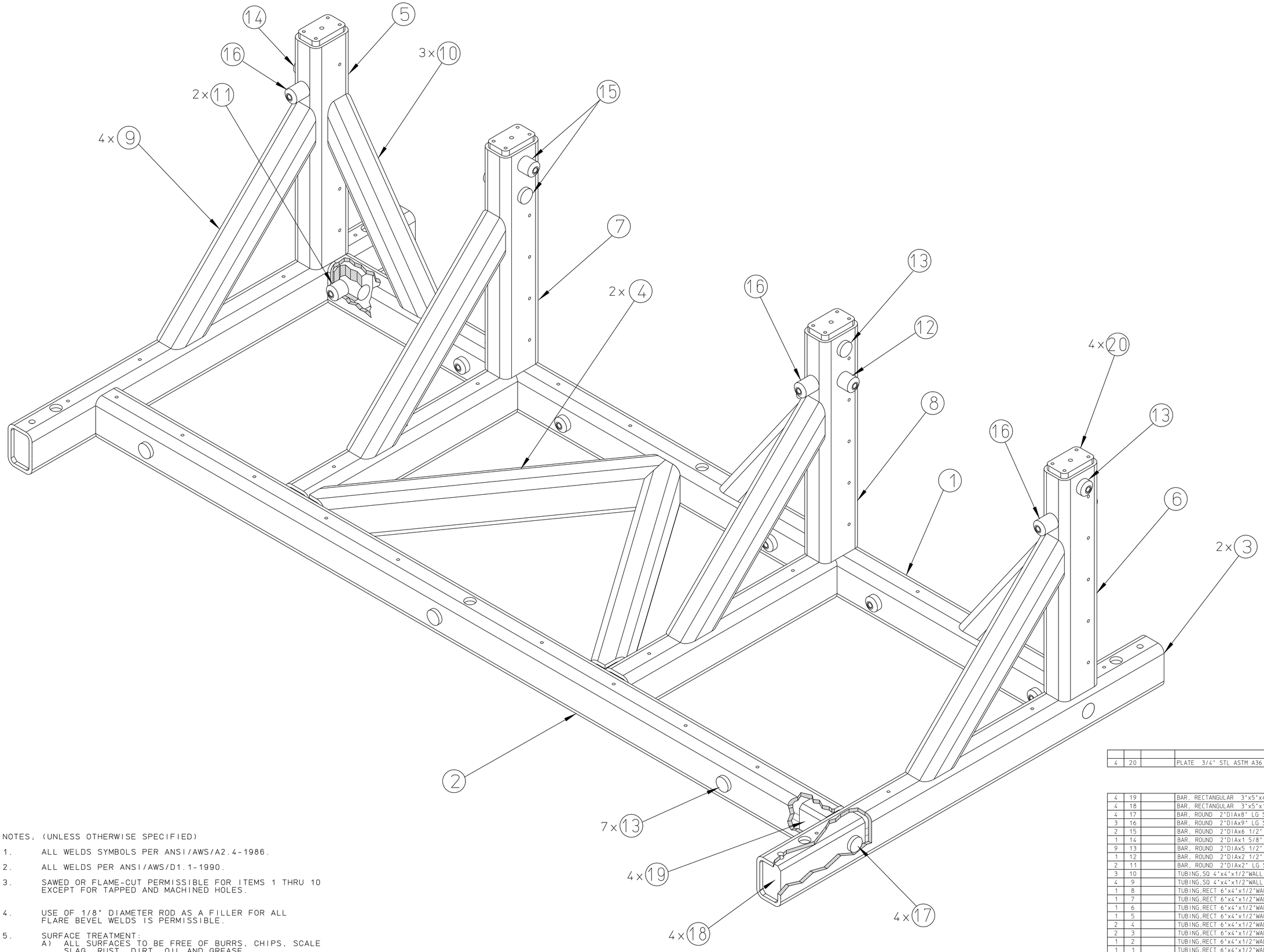

REQD	ITEM	PART NO.	DESCRIPTION
4	20		PLATE 3/4" STL ASTM A36

25B1996A

REQD	ITEM	PART NO.	DESCRIPTION
4	19		BAR, RECTANGULAR 3"x5"x4" LG STL ASTM A108
4	18		BAR, RECTANGULAR 3"x5"x14 1/8" LG STL ASTM A108
4	17		BAR, ROUND 2"DIAx8" LG STL ASTM A108
3	16		BAR, ROUND 2"DIAx9" LG STL ASTM A108
2	15		BAR, ROUND 2"DIAx6 1/2" LG STL ASTM A108
1	14		BAR, ROUND 2"DIAx1 5/8" LG STL ASTM A108
9	13		BAR, ROUND 2"DIAx5 1/2" LG STL ASTM A108
1	12		BAR, ROUND 2"DIAx2 1/2" LG STL ASTM A108
2	11		BAR, ROUND 2"DIAx2" LG STL ASTM A108
3	10		TUBING,SQ 4"x4"x1/2"WALL (28 5/16" LG) STL ASTM A-500
4	9		TUBING,SQ 4"x4"x1/2"WALL (32 3/4" LG) STL ASTM A-500
1	8		TUBING,RECT 6"x4"x1/2"WALL (32" LG) STL ASTM A-500
1	7		TUBING,RECT 6"x4"x1/2"WALL (32" LG) STL ASTM A-500
1	6		TUBING,RECT 6"x4"x1/2"WALL (32" LG) STL ASTM A-500
1	5		TUBING,RECT 6"x4"x1/2"WALL (32" LG) STL ASTM A-500
2	4		TUBING,RECT 6"x4"x1/2"WALL (42 5/8" LG) STL ASTM A-500
2	3		TUBING,RECT 6"x4"x1/2"WALL (64" LG) STL ASTM A-500
1	2		TUBING,RECT 6"x4"x1/2"WALL (121" LG) STL ASTM A-500
1	1		TUBING,RECT 6"x4"x1/2"WALL (121" LG) STL ASTM A-500

NOTES; (UNLESS OTHERWISE SPECIFIED)

1. ALL WELDS SYMBOLS PER ANSI/AWS/A2.4-1986.
2. ALL WELDS PER ANSI/AWS/D1.1-1990.
3. SAWED OR FLAME-CUT PERMISSIBLE FOR ITEMS 1 THRU 10 EXCEPT FOR TAPPED AND MACHINED HOLES.
4. USE OF 1/8" DIAMETER ROD AS A FILLER FOR ALL FLARE BEVEL WELDS IS PERMISSIBLE.
5. SURFACE TREATMENT:
   A) ALL SURFACES TO BE FREE OF BURRS, CHIPS, SCALE SLAG, RUST, DIRT, OIL AND GREASE.
   B) ALL SURFACES SHALL BE PAINTED WITH RUSTOLEUM LABOR SAVER HIGH PERFORMANCE POLYURETHANE 9800 DTM URETHANE MASTIC SYSTEM #9879 GLOSS BLACK OR EQUIVALENT.
6. APPROXIMATE WEIGHT: 2,250lbs
7. LOAD TEST AND INSPECT WELDS PER LBNL ENGINEERING NOTE #M7956.

REV	DWG	CHK	ZONE	DATE	CHANGES
A	RLOW			5/01	ADDED NOTE 7 & DETAIL "F", MODIFIED DETAIL "D" ITEM 14 WAS 5.63 LG & ITEM 16 QTY WAS 2

UNLESS OTHERWISE SPECIFIED
TOLERANCES: .X ± .1 FRAC. ±1/64; .XX ± .03 ANGLES ± 1°; .XXX ± .005 FINISH 125
THREADS ARE CLASS 2
CHAMFER ENDS OF ALL SCREW THREADS 30°.
CUT 1.5 PITCH THRD RELIEF WITH ROUND NOSE TOOL ON MACHINE CUT THREADS.
BREAK EDGES .016 MAX. ON MACHINED WORK.
REMOVE BURRS WELD SPLATTER & LOOSE SCALE
REFERENCES: ANSI Y14.5 & B46.1

SHOP ORDERS
ACCT. NO. | SERIAL NO.
DATE ISSD. | DATE REQD. | NO. REQD.
DELIVER TO
SURFACE TREATMENT: DEGREASE
IDENT METH.
DWG. BY: RAY LOW | DATE 04-03-01
CHK BY: DARYL OSHATZ | DATE 00-00-00

LAWRENCE BERKELEY LABORATORY
UNIVERSITY OF CALIFORNIA-BERKELEY
SNS-FES MEBT
MECHANICAL SUBSYSTEMS
MEBT SUPPORT BASE

PATENT CLEAR	DWG. TYPE	SHOWN ON	SCALE	DO NOT SCALE PRINTS
	ASSEMBLY		1/4	

MICROFILMED	DESIGN ACCT. NO.	CATEGORY CODE	DWG. NO.	SIZE	REV.
		FE3313	25B1996		A

SHEET 1 OF 4

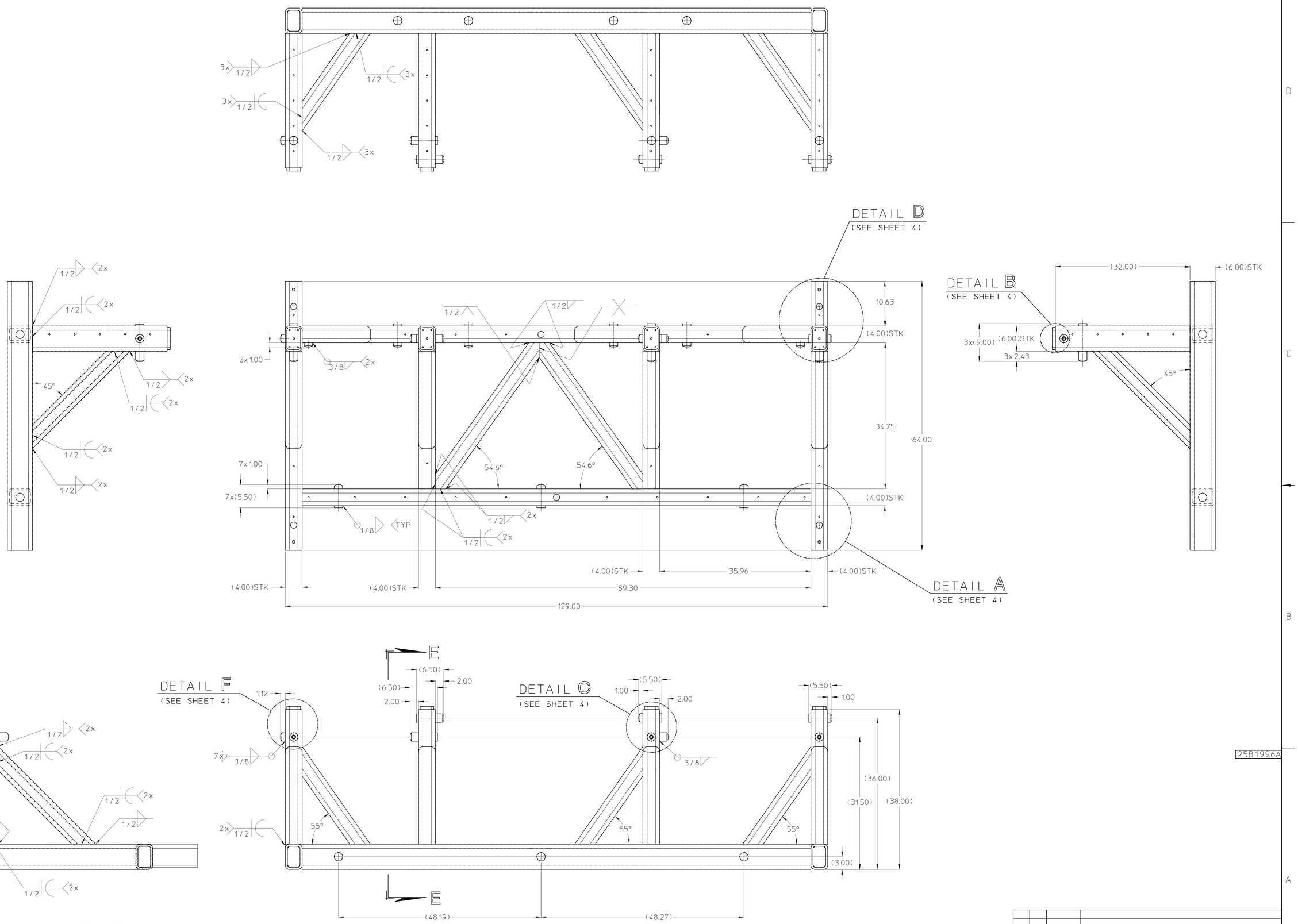

25B1996A

REV	DWG	CHK	ZONE	DATE	CHANGES
A	RLOW			5/01	SEE SHEET 1

REQD	ITEM	PART NO.	DESCRIPTION

UNLESS OTHERWISE SPECIFIED
TOLERANCES: .X ± .1 FRAC. ± 1/64; .XX ± .03 ANGLES ± 1°; .XXX ± .005 FINISH 125
THREADS ARE CLASS 2
CHAMFER ENDS OF ALL SCREW THREADS 30°.
CUT 1.5 PITCH THRD RELIEF WITH ROUND NOSE TOOL ON MACHINE CUT THREADS.
BREAK EDGES .016 MAX. ON MACHINED WORK.
REMOVE BURRS WELD SPLATTER & LOOSE SCALE
REFERENCES: ANSI Y14.5 & B46.1.

SHOP ORDERS
ACCT. NO. | SERIAL NO.
DATE ISSD. | DATE REQD. | NO. REQD.
DELIVER TO
SURFACE TREATMENT: DEGREASE
IDENT. METH.
DWG. BY: RAY LOW DATE 04-04-01
CHK. BY: DARYL OSHATZ DATE 04-04-01

LAWRENCE BERKELEY LABORATORY
UNIVERSITY OF CALIFORNIA-BERKELEY

SNS-FES MEBT
MECHANICAL SUBSYSTEM
MEBT SUPPORT BASE

PATENT CLEAR | DWG. TYPE: ASSEMBLY | SHOWN ON | SCALE 1/8 | DO NOT SCALE PRINTS
MICROFILMED | DESIGN ACCT. NO. | CATEGORY CODE FE3313 | DWG. NO. 25B1996 | SIZE | REV. A

SHEET 2 OF 4

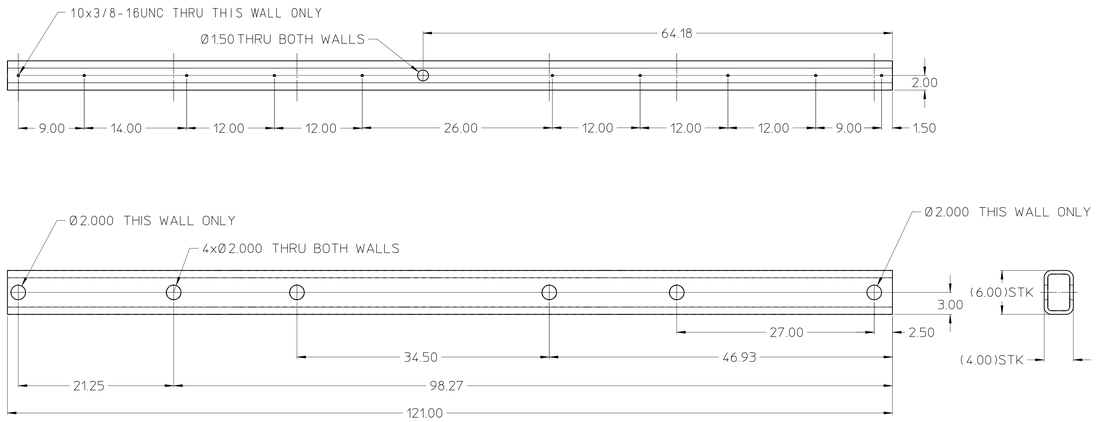

ITEM 1 DETAIL

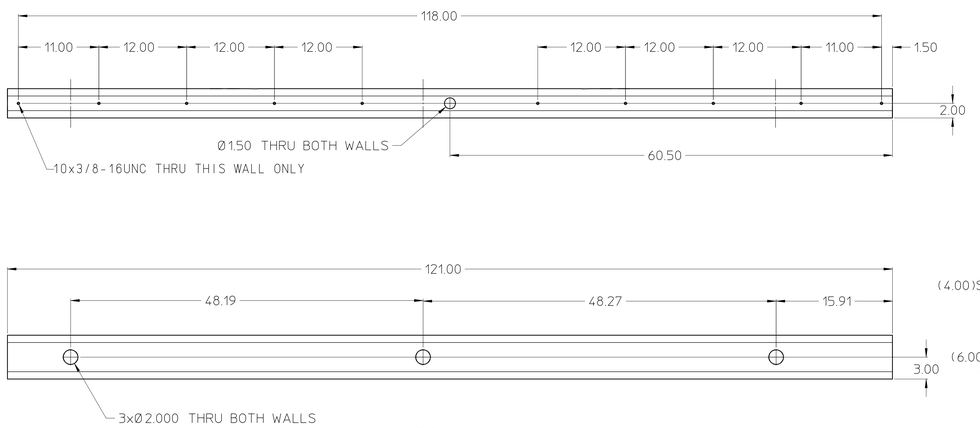

ITEM 2 DETAIL

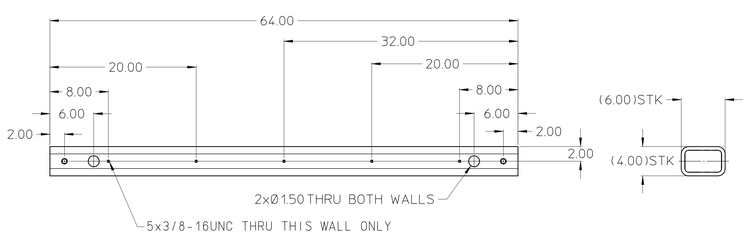

ITEM 3 DETAIL

2 REQD

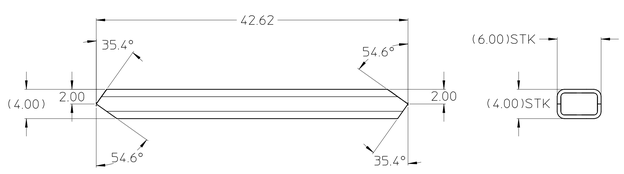

ITEM 4 DETAIL

2 REQD

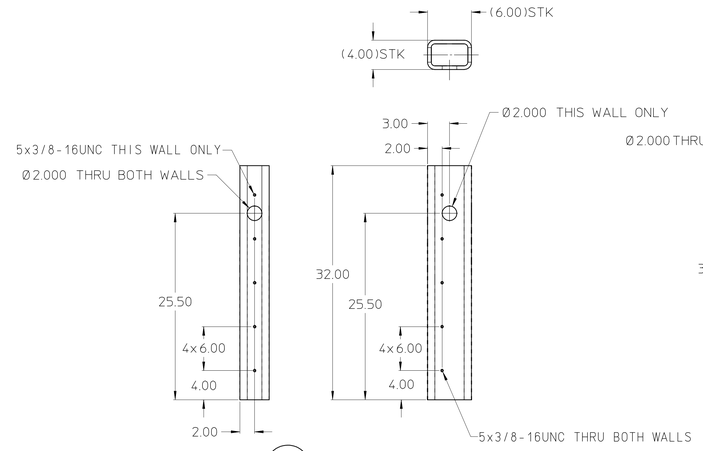

ITEM 5 DETAIL

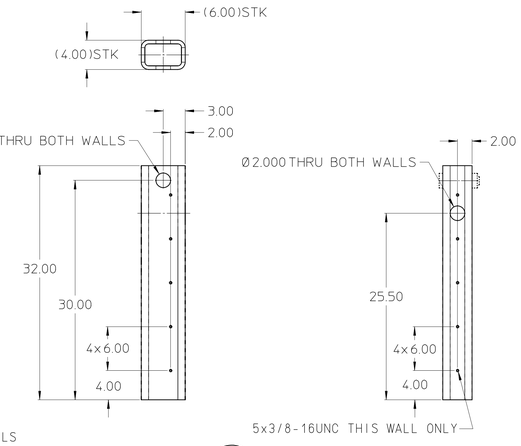

ITEM 6 DETAIL

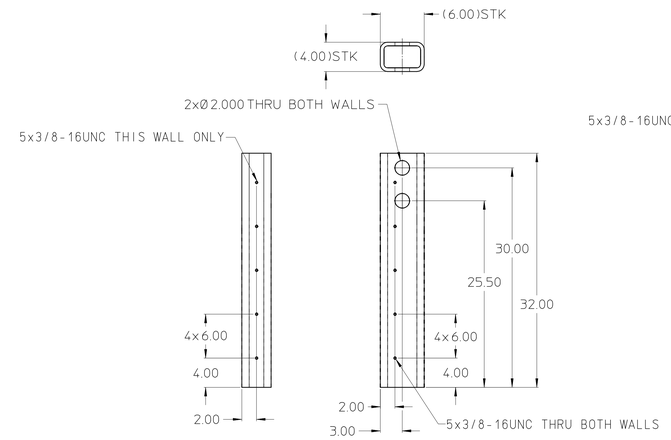

ITEM 7 DETAIL

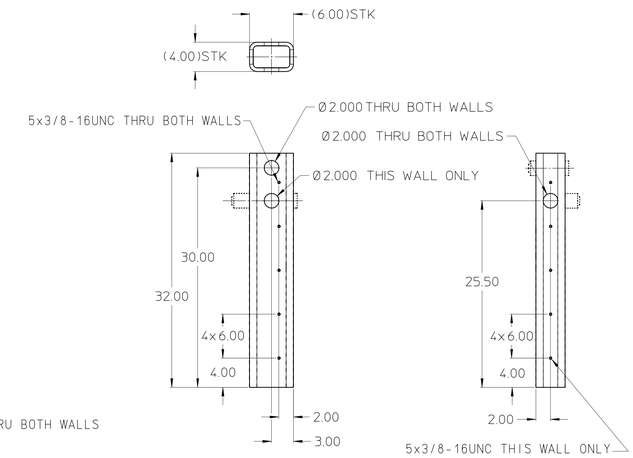

ITEM 8 DETAIL

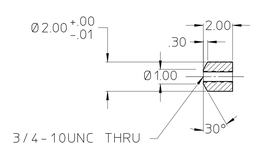

ITEM 11 DETAIL

SCALE: 1/4

2 REQD

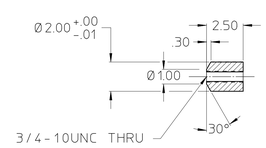

ITEM 12 DETAIL

SCALE: 1/4

1 REQD

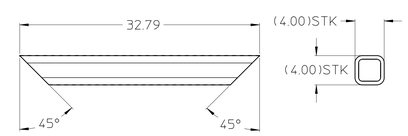

ITEM 9 DETAIL

4 REQD

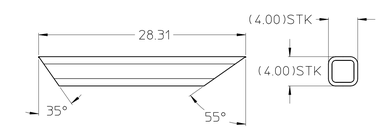

ITEM 10 DETAIL

3 REQD

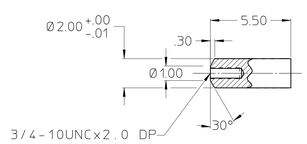

ITEM 13 DETAIL

SCALE: 1/4

9 REQD

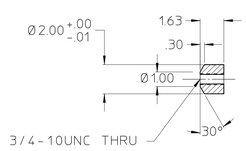

ITEM 14 DETAIL

SCALE: 1/4

1 REQD

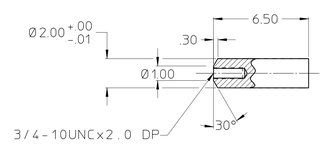

ITEM 15 DETAIL

SCALE: 1/4

2 REQD

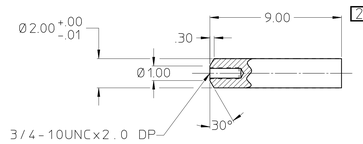

ITEM 16 DETAIL

SCALE: 1/4

3 REQD

25B1996A

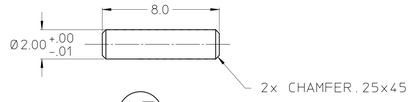

TTEM 17 DETAIL

SCALE: 1/4

4 REQD

REV	DWG	CHK	ZONE	DATE	CHANGES
A	RLOW			5/01	SEE SHEET 1

REQD	ITEM	PART NO.	DESCRIPTION

UNLESS OTHERWISE SPECIFIED
TOLERANCES: X ± .1 FRAC. ± 1/64; XX ± .03 ANGLES ± 1°; XXX ± .005 FINISH 125√
THREADS ARE CLASS 2
CHAMFER ENDS OF ALL SCREW THREADS 30°.
CUT 1.5 PITCH END RELIEF WITH ROUND NOSE TOOL ON MACHINE CUT THREADS.
BREAK EDGES .016 MAX. ON MACHINED WORK
REMOVE BURRS WELD SPLATTER & LOOSE SCALE
REFERENCES: ANSI Y14.5 & B46.1.

SHOP ORDERS
ACCT. NO. | SERIAL NO.
DATE ISSD | DATE REQD. | NO. REQD.
DELIVER TO
SURFACE TREATMENT: DEGREASE
IDENT. METH.
DWG. BY: RAY LOW DATE 04-04-01
CHK. BY: DARYL OSHATZ DATE 04-04-01

LAWRENCE BERKELEY LABORATORY
UNIVERSITY OF CALIFORNIA-BERKELEY
SNS-FES MEBT
MECHANICAL SUBSYSTEMS
MEBT SUPPORT BASE

PATENT CLEAR	DWG. TYPE	SHOWN ON	SCALE	DO NOT SCALE PRINTS
	ASSEMBLY		1/8 & NOTED	
MICROFILMED	DESIGN ACCT. NO.	CATEGORY CODE	DWG. NO.	SIZE / REV.
		FE3313	25B1996	A

SHEET 3 OF 4

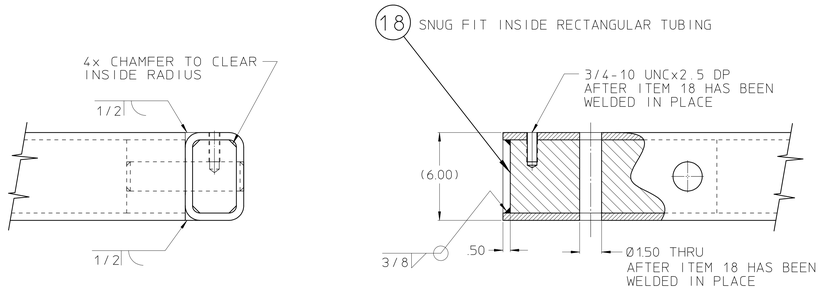

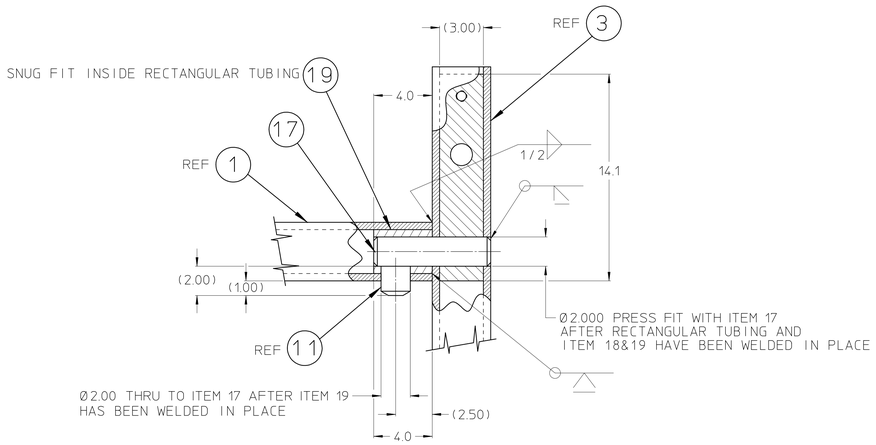

DETAIL D
SCALE: 1/4
TYPICAL 2 PLCS

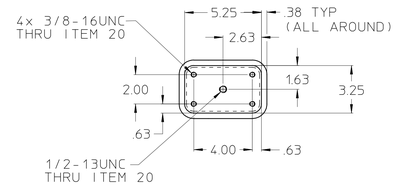

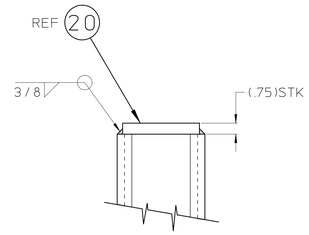

DETAIL B
SCALE: 1/4
TYPICAL 4 PLCS

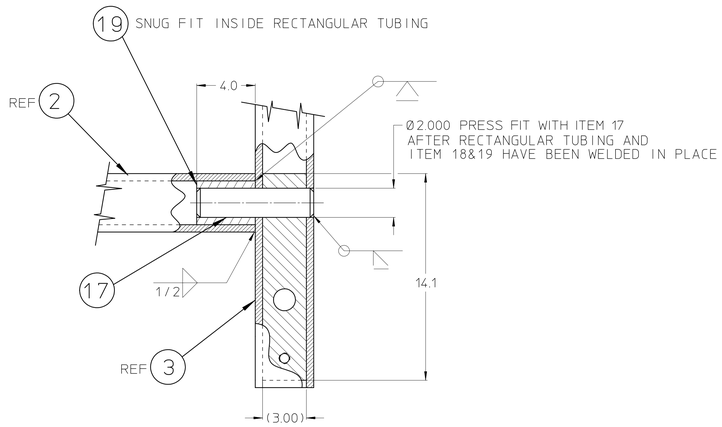

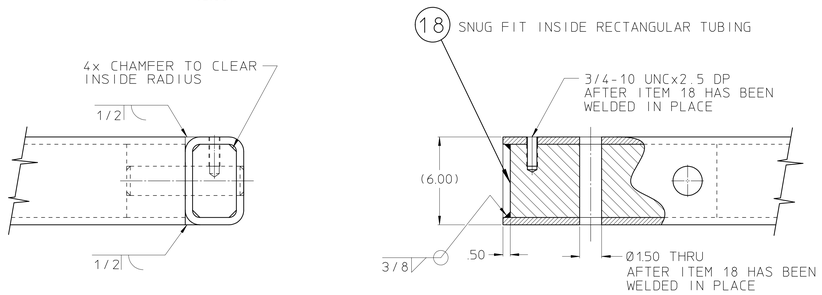

DETAIL A
SCALE: 1/4
TYPICAL 2 PLCS

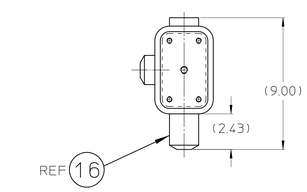

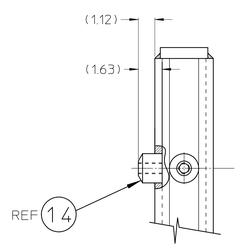

DETAIL F
SCALE: 1/4

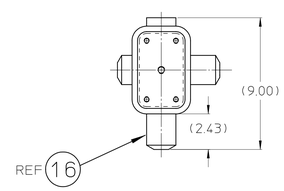

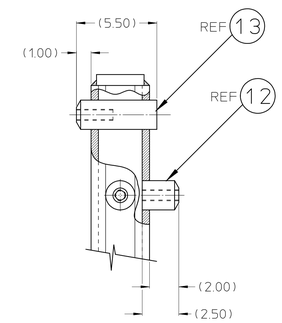

DETAIL C
SCALE: 1/4

25B1996A

REV	DWG	CHK	ZONE	DATE	CHANGES
A	RLOW			5/01	SEE SHEET 1

REQD	ITEM	PART NO.	DESCRIPTION

UNLESS OTHERWISE SPECIFIED
TOLERANCES: .X ± .1 FRAC. ± 1/64; .XX ± .03 ANGLES ± 1°; .XXX ± .005 FINISH 125
THREADS ARE CLASS 2
CHAMFER ENDS OF ALL SCREW THREADS 30°.
CUT 1.5 PITCH THRD RELIEF WITH ROUND NOSE TOOL ON MACHINE CUT THREADS.
BREAK EDGES .016 MAX. ON MACHINED WORK.
REMOVE BURRS WELD SPLATTER & LOOSE SCALE
REFERENCES: ANSI Y14.5 & B46.1.

SHOP ORDERS
ACCT. NO. | SERIAL NO.
DATE ISSD | DATE REQD. | NO. REQD.
DELIVER TO
SURFACE TREATMENT: DEGREASE
IDENT. METH.
DWG. BY: RAY LOW | DATE 04-04-01
CHK. BY: DARYL OSHATZ | DATE 04-04-01

LAWRENCE BERKELEY LABORATORY
UNIVERSITY OF CALIFORNIA-BERKELEY
SNS-FES MEBT
MECHANICAL SUBSYSTEM
MEBT SUPPORT BASE

PATENT CLEAR	DWG. TYPE	SHOWN ON	SCALE	DO NOT SCALE PRINTS
	ASSEMBLY		1/4	
MICROFILMED	DESIGN ACCT. NO.	CATEGORY CODE	DWG. NO.	SIZE	REV.
		FE3313	25B1996	A	

SHEET 4 OF 4