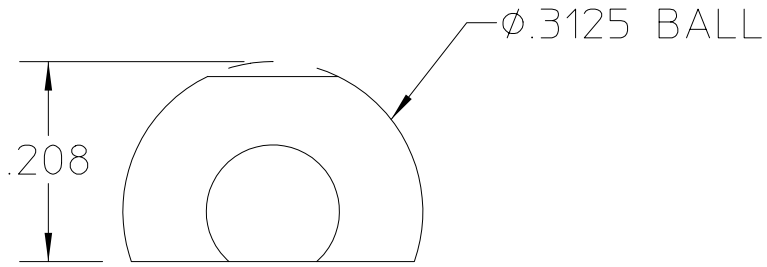

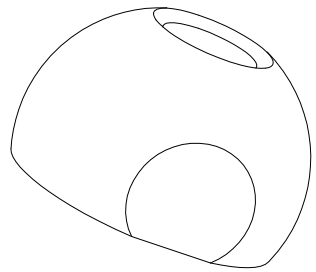

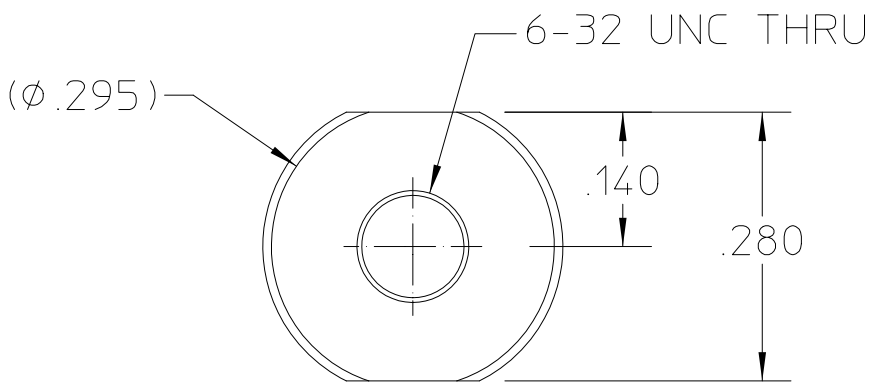

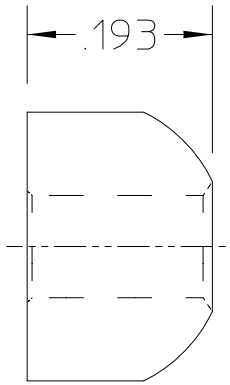

NOTES (UNLESS OTHERWISE SPECIFIED)

1. ALL DIMENSIONS ARE IN INCHES UNLESS OTHERWISE NOTED.
2. THIS IS AN ULTRA HIGH VACUUM COMPONENT AND REQUIRES SPECIAL ATTENTION TO AVOID CONTAMINATION, REFER TO LBNL ENGINEERING SPECIFICATION #M20013 FOR CLEANING PROCEDURES.

MAT 2: ,	NOTES:
MAT 1: BALL, 302 S.S., .3125 OD, MCMASTER-CARR P/N 9291K27	NOTES:

REV	AUTHOR	APPROVER	DATE	CHANGES
A	ajdemell	plate	10-19-20	INITIAL

UNLESS OTHERWISE SPECIFIED
REF: ASME Y14.5M-1994, THREADS ARE CLASS 2
BREAK EDGES .016 MAX. ON MACHINED WORK
REMOVE BURRS, WELD SPLATTER & LOOSE SCALE

TOLERANCES: .X±.- .XX±.01 .XXX±.005
FRACTIONS: ± -/--
ANGLES: ± 2.0°/INCH
MACH. SURFS.: 63 ✓ OR BETTER

PROJECT NAME: Advanced Light Source

UNIQUE NUMBER: AL-0014-0414

DO NOT SCALE PRINT
SCALE: 5 : 1

CATEGORY CODE: AL 4160

THIRD ANGLE PROJECTION

ERNEST ORLANDO LAWRENCE
BERKELEY NATIONAL LABORATORY
UNIVERSITY OF CALIFORNIA

ALS - INSERTION DEVICE BEAMLINES
BL 6.0 FRONT END
PUSH-PULL TRUNCATED BALL

SHEET 1 OF 1 | SIZE: A | DWG NO: 26B851 | REV A

AUTO GENERATED PDF
Oct 20 2004 16:31:13 PDT