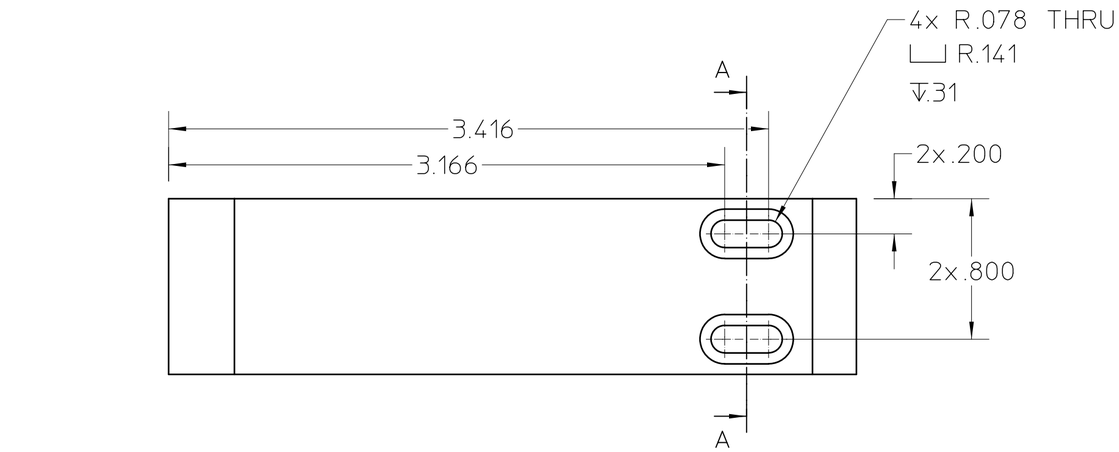

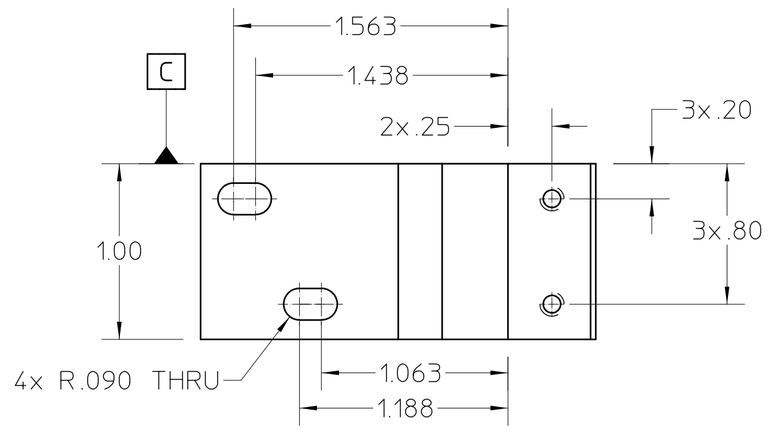

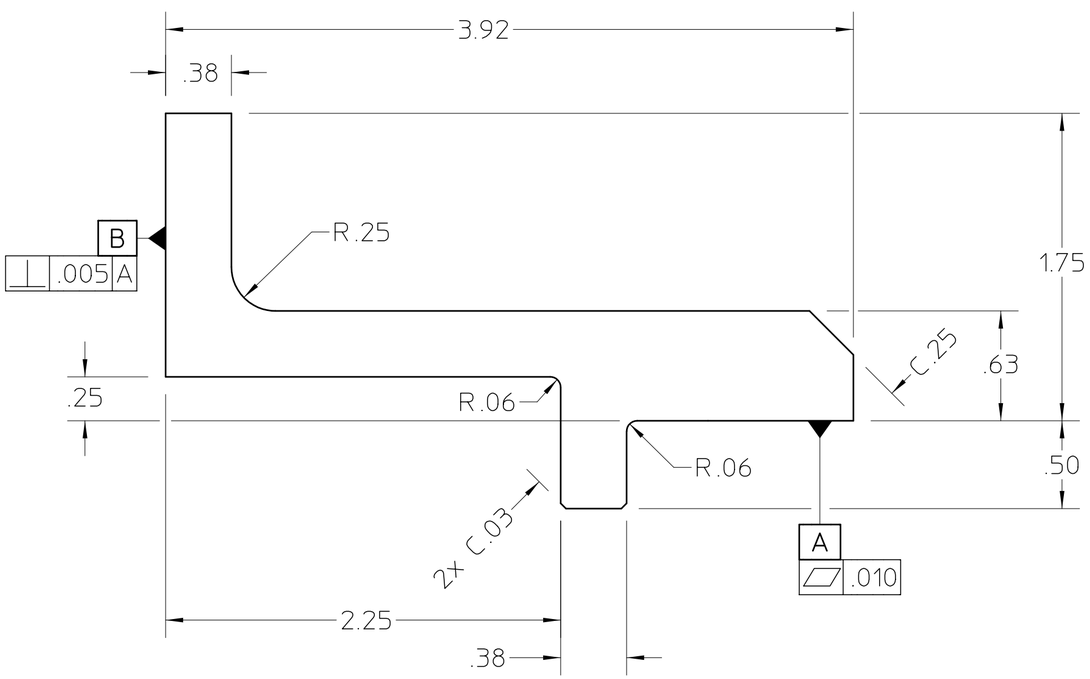

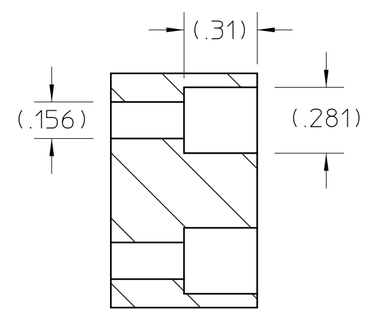

SECTION A-A
SCALE 2:1

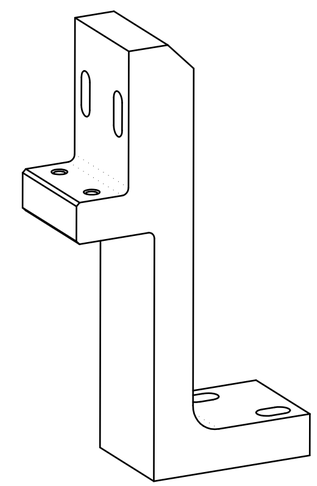

ISO VIEW
SCALE 1:1

NOTES (UNLESS OTHERWISE SPECIFIED)

1. ALL DIMENSIONS ARE IN INCHES UNLESS OTHERWISE NOTED.
2. THIS IS A ULTRA HIGH VACUUM COMPONENT AND REQUIRES SPECIAL ATTENTION TO AVOID CONTAMINATION, REFER TO LBNL ENGINEERING SPECIFICATION #M20013 FOR CLEANING PROCEDURES.
3. ALL HIDDEN LINES MAY NOT BE SHOWN.

REV	AUTHOR	APPROVER	DATE	CHANGE DESCRIPTION
A	ajdemell	plate	10-19-20	INITIAL REVISION

UNLESS OTHERWISE SPECIFIED
TOLERANCES: .X± .06 .XX± .02 .XXX± .010
FRACTIONS: ± -/--
ANGLES: ± 2.0°/INCH
MACH. SURFS.: 63 ✓ OR BETTER
REF: ASME Y14.5M-1994, THREADS ARE CLASS 2
BREAK EDGES .016 MAX. ON MACHINED WORK
REMOVE BURRS, WELD SPLATTER & LOOSE SCALE

MAT 2: , NOTES:
MAT 1: , ALUMINUM 6061 NOTES:

PROJECT NAME: Advanced Light Source
UNIQUE NUMBER: AL-0010-8150
DO NOT SCALE PRINT
SCALE: 1.5:1
CATEGORY CODE: AL 4160
THIRD ANGLE PROJECTION

ERNEST ORLANDO LAWRENCE BERKELEY NATIONAL LABORATORY
UNIVERSITY OF CALIFORNIA
BERKELEY LAB

ALS - INSERTION DEVICE BEAMLINES
BL 6.0 FRONT END
AP201 APERTURE MOUNT

SHEET 1 OF 1 | SIZE: C | DWG NO: 26B812 | REV A

AUTO GENERATED PDF
Oct 20 2004 16:29:06 PDT