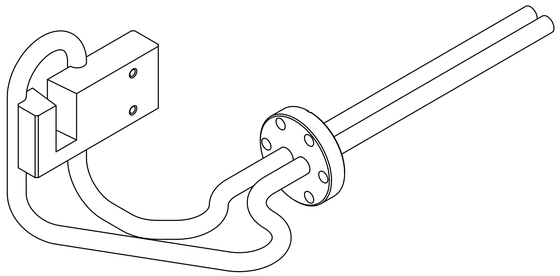

ISO 1
SCALE 1:1

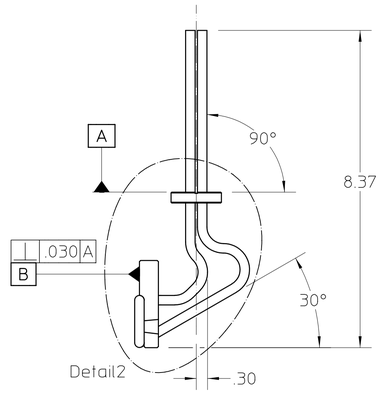

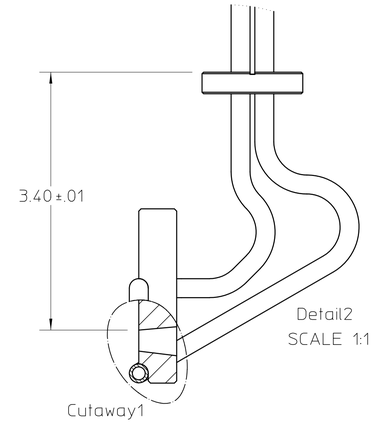

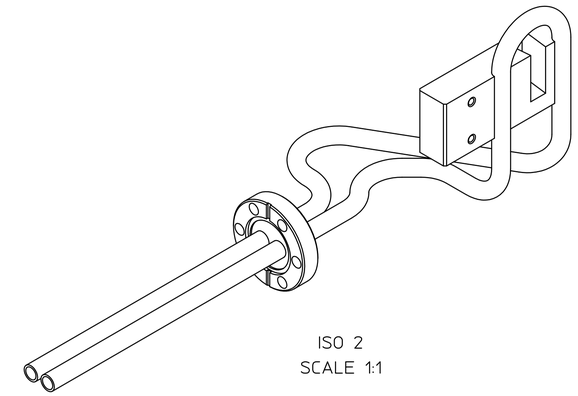

ISO 2
SCALE 1:1

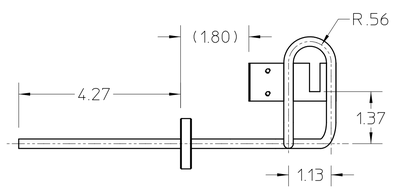

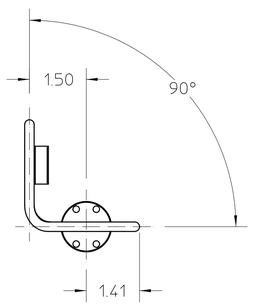

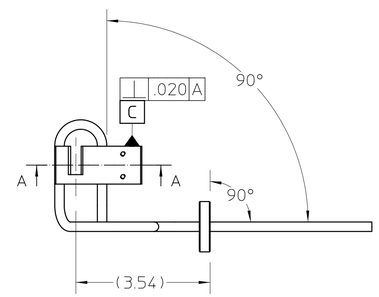

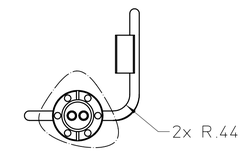

Detail1

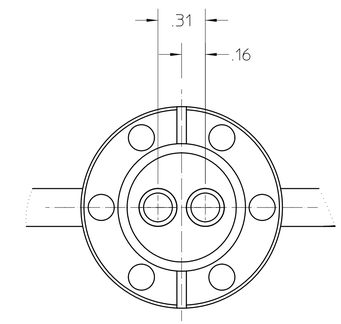

Detail1
SCALE 2:1

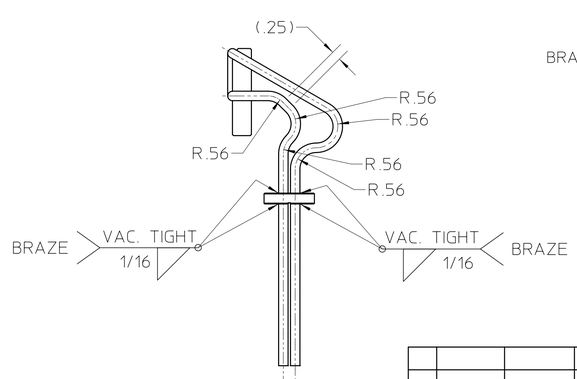

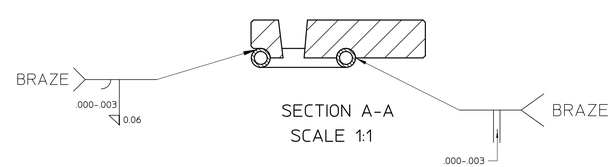

SECTION A-A
SCALE 1:1

NOTES (UNLESS OTHERWISE SPECIFIED)

1. ALL DIMENSIONS APPLY AFTER BRAZING.
2. ALL DIMENSIONS ARE IN INCHES UNLESS OTHERWISE NOTED.
3. BRAZING TO BE CONDUCTED IN A VACUUM FURNACE. REFER TO LBNL ENGINEERING NOTE #M7184, MIRROR BRAZING TECHNIQUES.
4. THIS IS AN ULTRA HIGH VACUUM ASSEMBLY AND REQUIRES SPECIAL ATTENTION TO AVOID CONTAMINATION, REFER TO LBNL ENGINEERING SPECIFICATION #M20013 FOR CLEANING PROCEDURES.
5. PROTECT FINISHED PART FROM DAMAGE. TAKE CARE NOT TO DING, SCRATCH, DENT, OR OTHERWISE MARK ANY MACHINED SURFACE.
6. PROTECT CONFLAT FLANGE KNIFE EDGE AT ALL TIMES.
7. BRAZE OF 1/4" COPPER TUBE TO FLANGE TO BE VACUUM TIGHT AND IS TO BE HELIUM LEAK TESTED. THE LEAK RATE NOT TO EXCEED 2 X 10E-9 cc/sec He.

REQD	ITEM	PART NO.	DESCRIPTION
3	1		COPPER TUBING, 1/4" O.D., .03" WALL THICKNESS
2	1	110000	1.33 CF FLANGE, MDC OR EQUIVALENT
1	1	26B810	APERTURE

REV	AUTHOR	APPROVER	DATE	CHANGE DESCRIPTION
A	ajdemell	plate	10-19-20	INITIAL REVISION

UNLESS OTHERWISE SPECIFIED
TOLERANCES: .X ± .- .XX ± .03 .XXX ± .010
FRACTIONS: ± -/--
ANGLES: ± 2.0°/INCH
MACH. SURFS.: 63 ✓ OR BETTER
REF: ASME Y14.5M-1994, THREADS ARE CLASS 2
BREAK EDGES .016 MAX. ON MACHINED WORK
REMOVE BURRS, WELD SPLATTER & LOOSE SCALE

PROJECT NAME: Advanced Light Source
UNIQUE NUMBER: AL-0011-1655
DO NOT SCALE PRINT
SCALE: 1 : 2
CATEGORY CODE: AL 4160
THIRD ANGLE PROJECTION

ERNEST ORLANDO LAWRENCE
BERKELEY NATIONAL LABORATORY
UNIVERSITY OF CALIFORNIA
BERKELEY LAB

ALS - INSERTION DEVICE BEAMLINES
BL 6.0 FRONT END
AP 201 BRAZEMENT ASSEMBLY

SHEET 1 OF 1 | SIZE: D | DWG NO: 26B811 | REV A

AUTO GENERATED PDF
Oct 20 2004 16:29:38 PDT