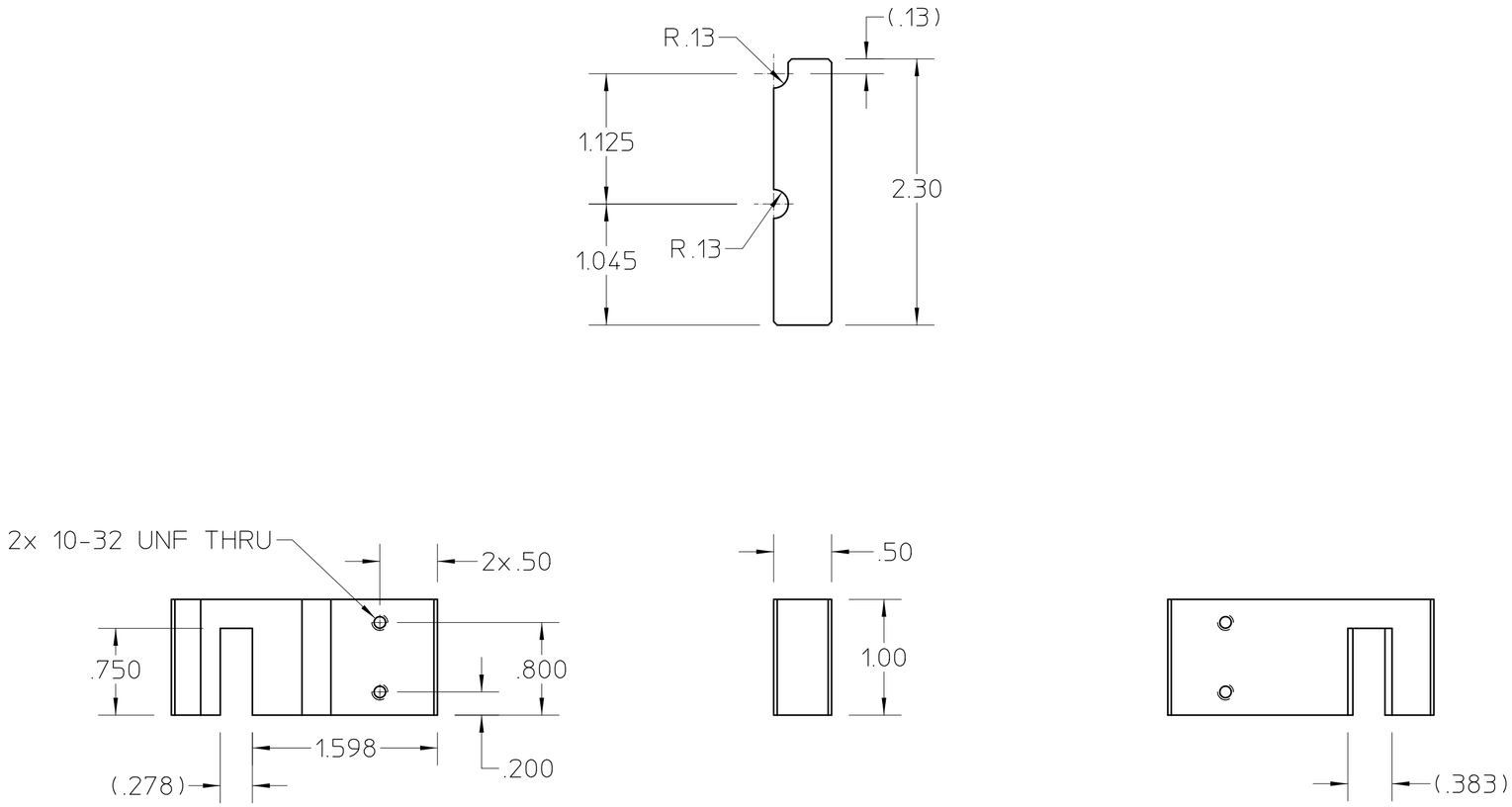

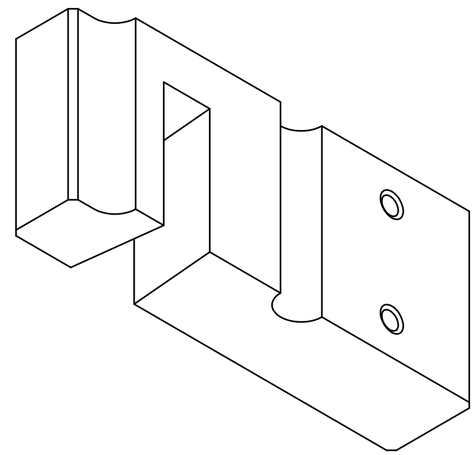

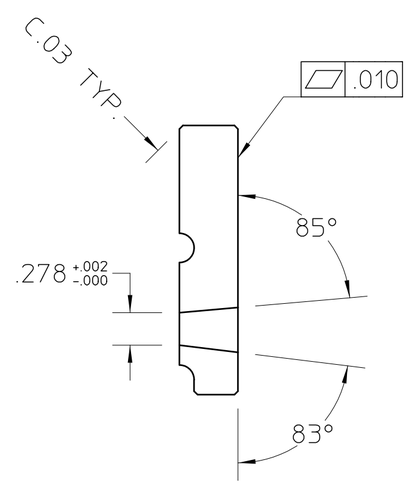

NOTES (UNLESS OTHERWISE SPECIFIED)

1. ALL DIMENSIONS ARE IN INCHES UNLESS OTHERWISE NOTED.
2. THIS IS AN ULTRA HIGH VACUUM COMPONENT AND REQUIRES SPECIAL ATTENTION TO AVOID CONTAMINATION, REFER TO LBNL ENGINEERING SPECIFICATION #M20013 FOR CLEANING PROCEDURES.
3. ALL HIDDEN LINES MAY NOT BE SHOWN.

REV	AUTHOR	APPROVER	DATE	CHANGE DESCRIPTION
A	ajdemell	plate	10-19-20	INITIAL REVISION

UNLESS OTHERWISE SPECIFIED
TOLERANCES: .X± .- .XX±.01 .XXX±.005
FRACTIONS: ± -/--
ANGLES: ± 1.0°/INCH
MACH. SURFS.: 63 ✓ OR BETTER
REF:ASME Y14.5M-1994, THREADS ARE CLASS 2
BREAK EDGES .016 MAX. ON MACHINED WORK
REMOVE BURRS, WELD SPLATTER & LOOSE SCALE

MAT 2: , NOTES:
MAT 1: BLOCK, OFHC COPPER NOTES:

PROJECT NAME: Advanced Light Source
UNIQUE NUMBER: AL-0010-8149
DO NOT SCALE PRINT SCALE: 1 : 1
CATEGORY CODE: AL 4160
THIRD ANGLE PROJECTION

ERNEST ORLANDO LAWRENCE BERKELEY NATIONAL LABORATORY
UNIVERSITY OF CALIFORNIA
ALS - INSERTION DEVICE BEAMLINES
BL 6.0 FRONT END
APERTURE 201
SHEET 1 OF 1 SIZE: C DWG NO: 26B810 REV A

AUTO GENERATED PDF
Oct 20 2004 16:29:20 PDT