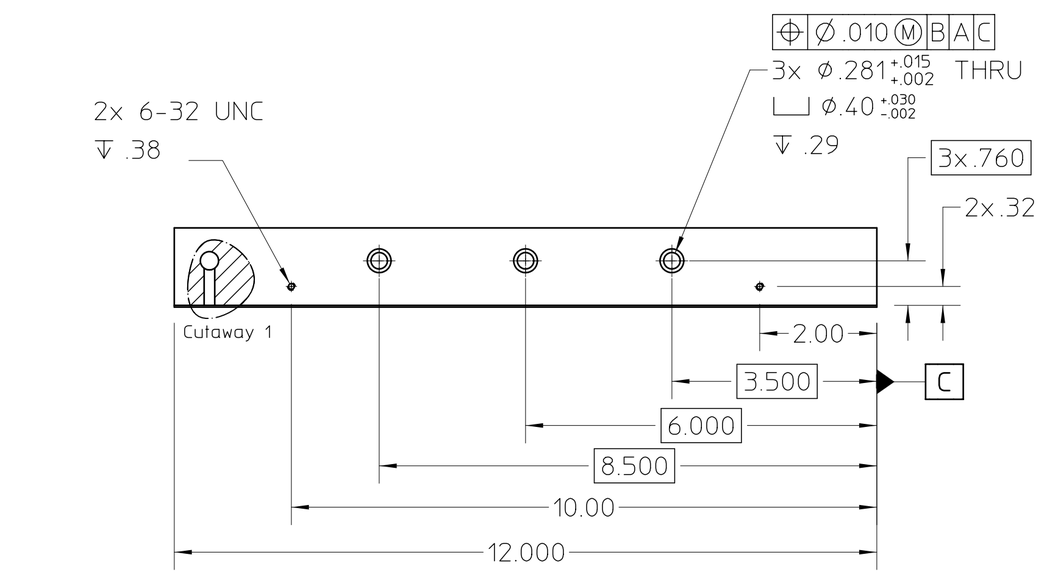

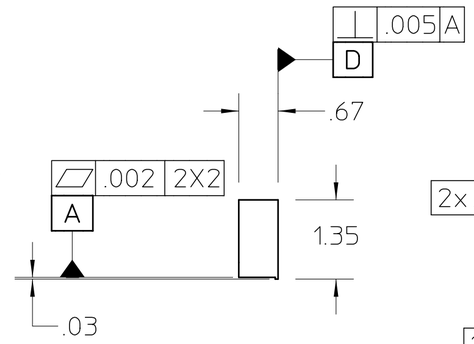

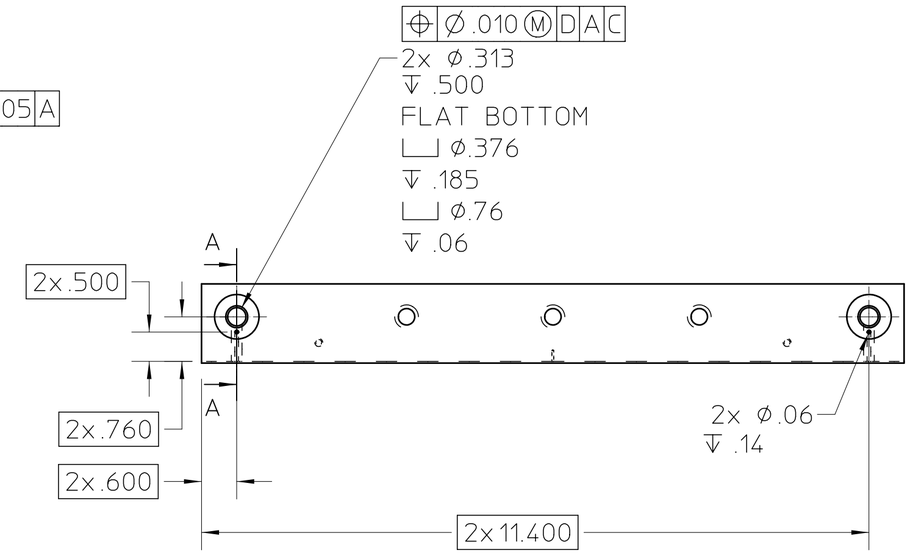

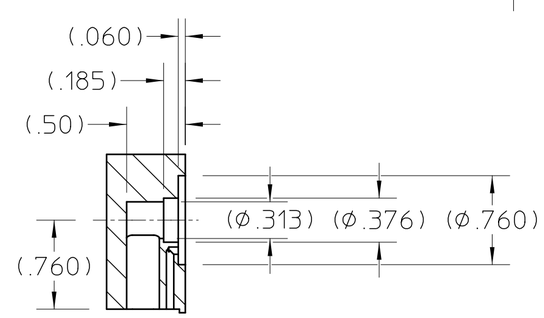

SECTION A-A
SCALE 1:1

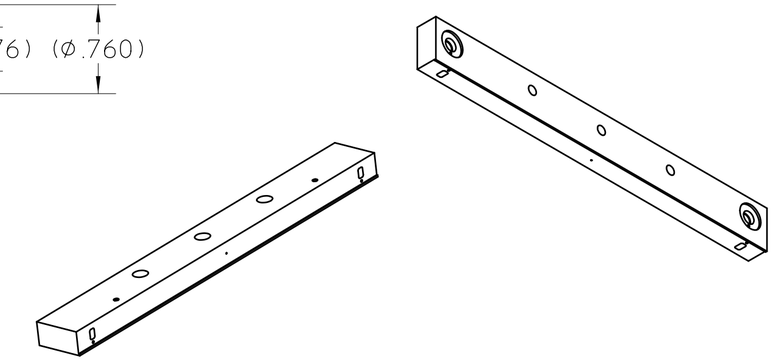

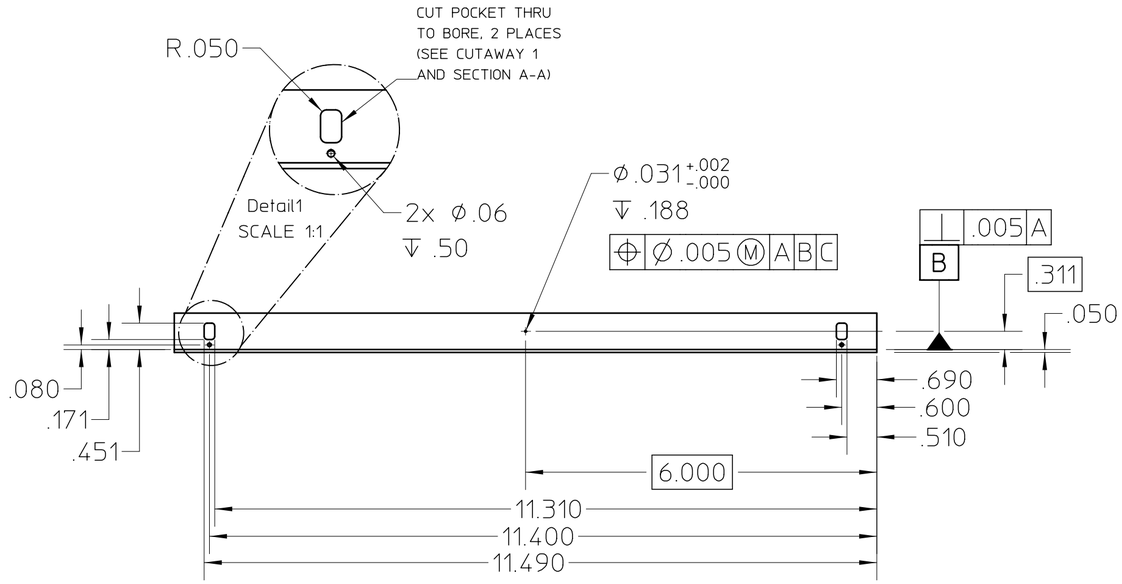

NOTES (UNLESS OTHERWISE SPECIFIED)

1. ALL DIMENSIONS ARE IN INCHES.
2. THIS IS AN ULTRA HIGH VACUUM COMPONENT AND REQUIRES SPECIAL ATTENTION TO AVOID CONTAMINATION, REFER TO LBNL ENGINEERING SPECIFICATION #M20013 FOR CLEANING PROCEDURES.
3. DO NOT GRIND BRAZING SURFACE (DATUM "A").

REV	AUTHOR	APPROVER	DATE	CHANGE DESCRIPTION
A	ajdemell	plate	10-19-20	INITIAL REVISION

UNLESS OTHERWISE SPECIFIED
TOLERANCES: .X± .- .XX±.01 .XXX±.005
FRACTIONS: ± -/--
ANGLES: ± 1.0°/INCH
MACH. SURFS.: 63 ✓ OR BETTER
REF:ASME Y14.5M-1994, THREADS ARE CLASS 2
BREAK EDGES .016 MAX. ON MACHINED WORK
REMOVE BURRS, WELD SPLATTER & LOOSE SCALE

MAT 2: , NOTES:
MAT 1: , STAINLESS STEEL 304 NOTES:

PROJECT NAME: Advanced Light Source
UNIQUE NUMBER: AL-0010-7918
DO NOT SCALE PRINT SCALE: 1:2
CATEGORY CODE: AL 4160
THIRD ANGLE PROJECTION

ERNEST ORLANDO LAWRENCE
BERKELEY NATIONAL LABORATORY
UNIVERSITY OF CALIFORNIA
BERKELEY LAB

ALS - INSERTION DEVICE BEAMLINES
BL 6.0 FRONT END
STRONG BACK

SHEET 1 OF 1 SIZE: C DWG NO: 26B796 REV A

AUTO GENERATED PDF
Oct 20 2004 16:28:08 PDT