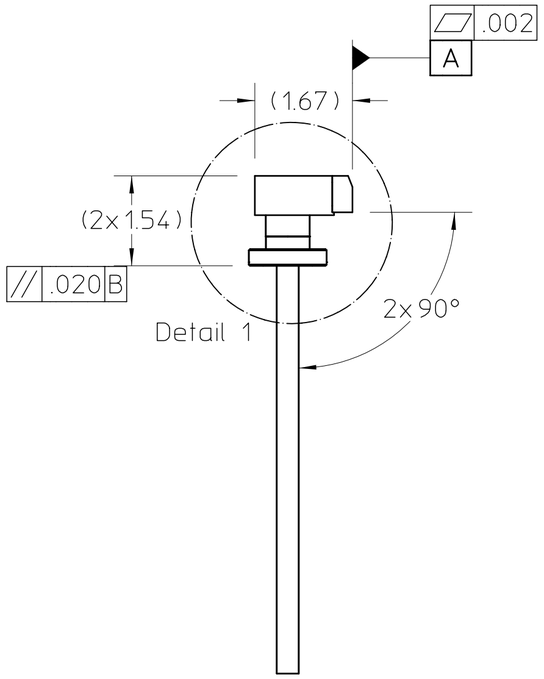

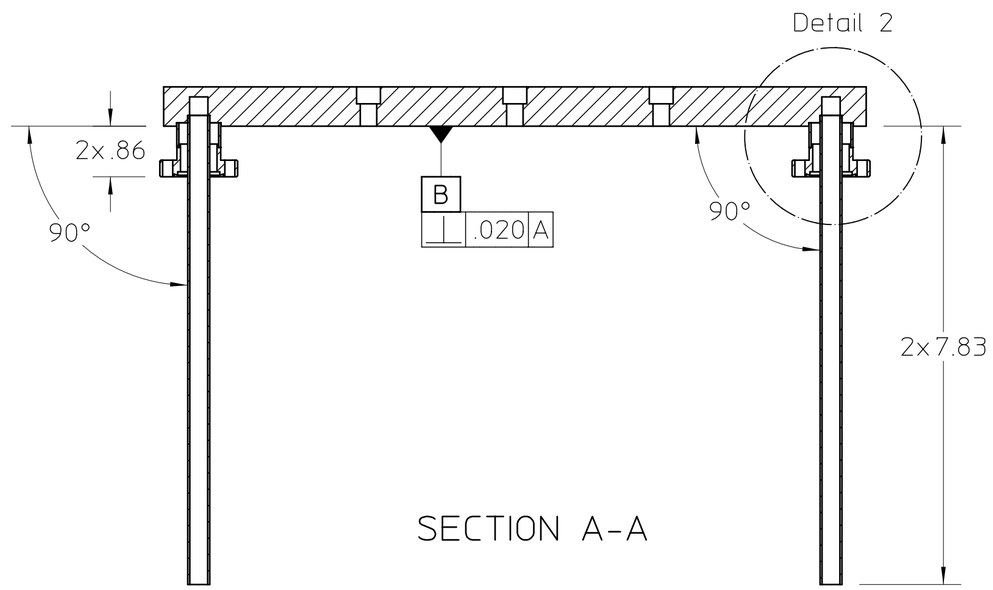

SECTION A-A

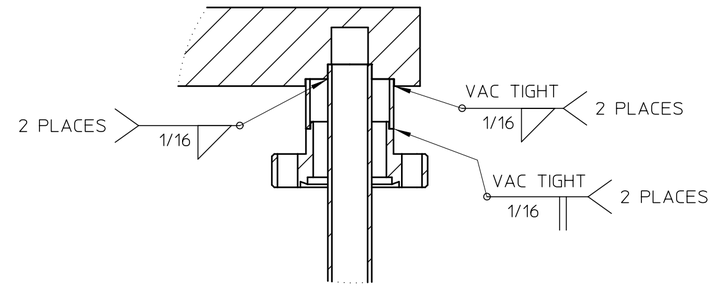

Detail View 2
SCALE 1:1

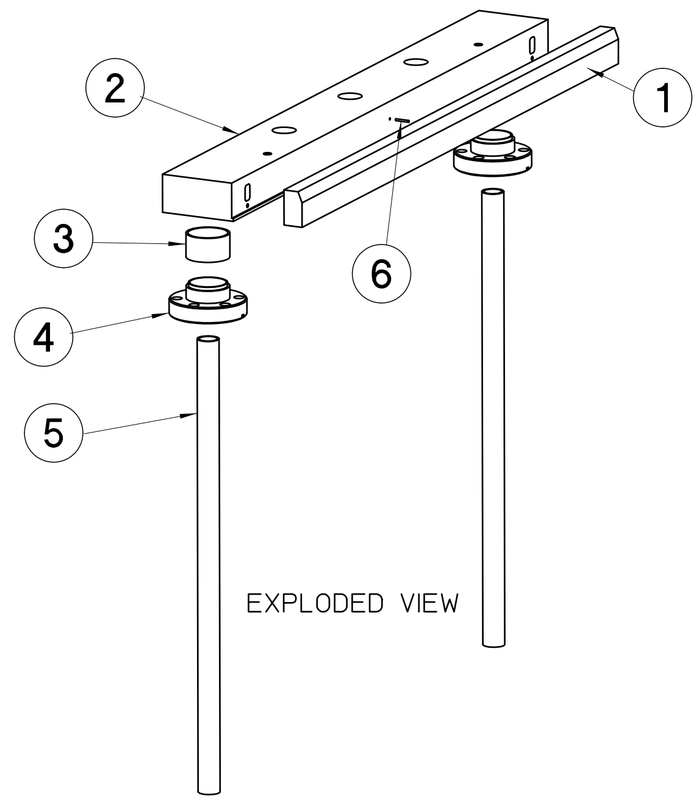

EXPLODED VIEW

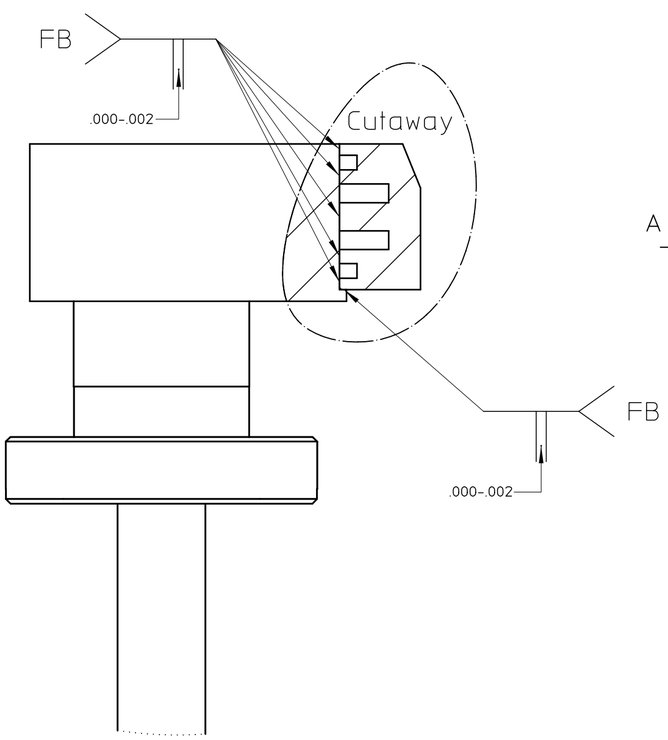

Detail View 1
SCALE 2:1

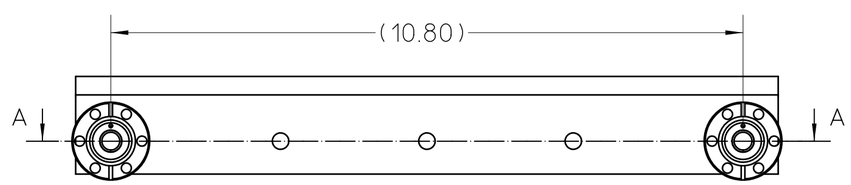

NOTES (UNLESS OTHERWISE SPECIFIED)

1. ALL DIMENSIONS APPLY AFTER WELDING AND BRAZING.
2. ALL DIMENSIONS ARE IN INCHES UNLESS OTHERWISE NOTED.
3. BRAZING TO BE CONDUCTED IN A VACUUM FURNACE. REFER TO LBNL ENGINEERING NOTE #M7184, MIRROR BRAZING TECHNIQUES.
4. THIS PART IS A COMPONENT OF A UHV WELDMENT. ALL CLEANING IS TO BE ACCORDING TO LBL SPEC NO M20013. HANDLE ALL ITEMS WITH ULTRA HIGH VACUUM TECHNIQUES.
5. PROTECT FINISHED PART FROM DAMAGE. TAKE CARE NOT TO DING, SCRATCH, DENT, OR OTHERWISE MARK ANY MACHINED SURFACE.
6. PROTECT CONFLAT FLANGE KNIFE EDGE AT ALL TIMES.
7. ALL CONTINUOUS WELDS TO BE VACUUM TIGHT AND ARE TO BE HELIUM LEAK TESTED. THE LEAK RATE NOT TO EXCEED 2 X 10E-9 cc/sec He.
8. BRAZE TO BE VACUUM TIGHT AND ARE TO BE HELIUM LEAK TESTED. THE LEAK RATE NOT TO EXCEED 2 X 10E-9 cc/sec He.

REQD	ITEM	PART NO.	DESCRIPTION
1	6		Ø1/32" x .25" LG. HARDENED STEEL DOWEL PIN
2	5		TUBE, .375 OD x .035 WALL SS
2	4		MINI FLANGE, 1.33in-CFF, MDC #110004 OR EQUIV.
2	3		TUBE, .75 OD x .035 WALL SS
1	2	26B796	STRONG BACK
1	1	26B795	COOLING BAR

REV	AUTHOR	APPROVER	DATE	CHANGE DESCRIPTION
A	ajdemell	plate	10-19-20	INITIAL REVISION

UNLESS OTHERWISE SPECIFIED
TOLERANCES: .X± .- .XX±.02 .XXX±.---
FRACTIONS: ± -/--
ANGLES: ± 0.5°/INCH
MACH. SURFS.: 63 ✓ OR BETTER
REF:ASME Y14.5M-1994, THREADS ARE CLASS 2
BREAK EDGES .016 MAX. ON MACHINED WORK
REMOVE BURRS, WELD SPLATTER & LOOSE SCALE

PROJECT NAME: Advanced Light Source
UNIQUE NUMBER: AL-0010-7929
DO NOT SCALE PRINT
SCALE: 1:2
CATEGORY CODE: AL 4160
THIRD ANGLE PROJECTION

ERNEST ORLANDO LAWRENCE
BERKELEY NATIONAL LABORATORY
UNIVERSITY OF CALIFORNIA
BERKELEY LAB

ALS - INSERTION DEVICE BEAMLINES
BL 6.0 FRONT END
COOLING BAR WELDMENT/BRAZEMENT ASSEMBLY

SHEET 1 OF 1 | SIZE: C | DWG NO: 26B794 | REV A

AUTO GENERATED PDF
Oct 20 2004 16:27:35 PDT