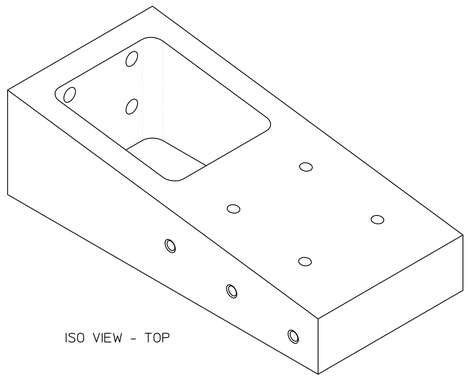

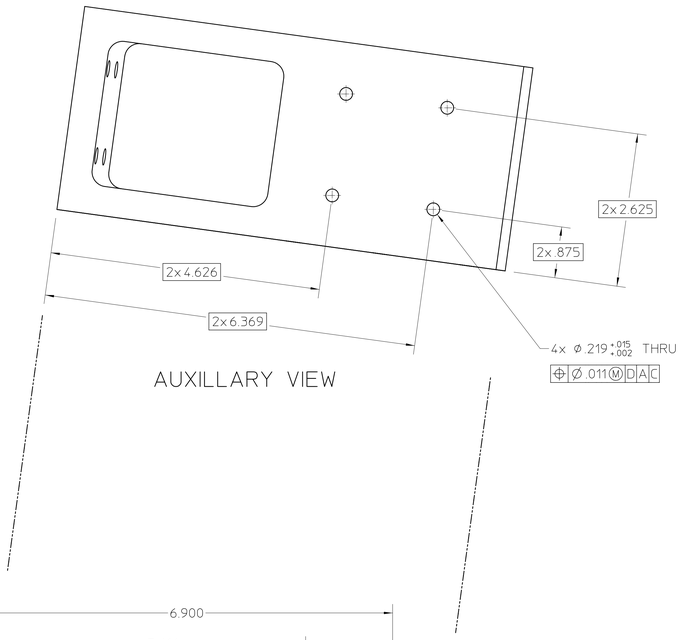

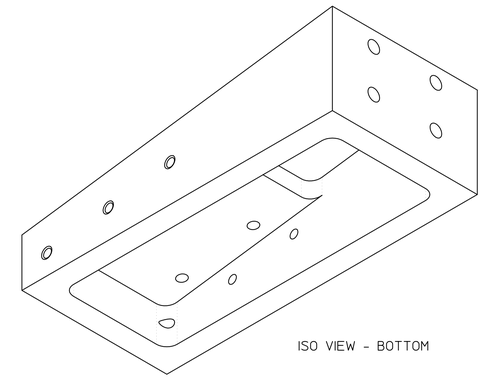

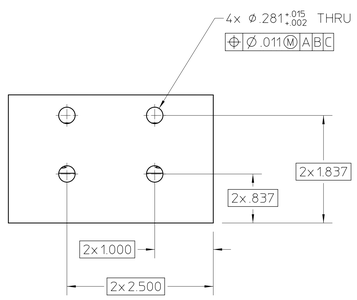

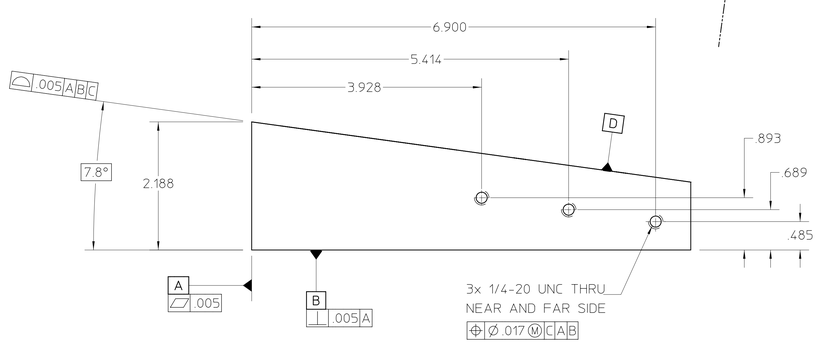

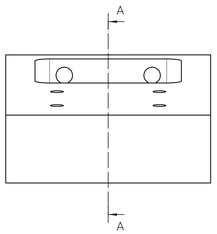

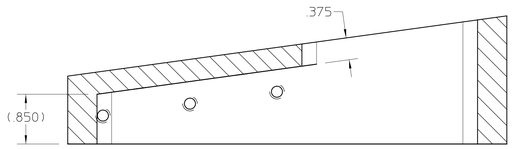

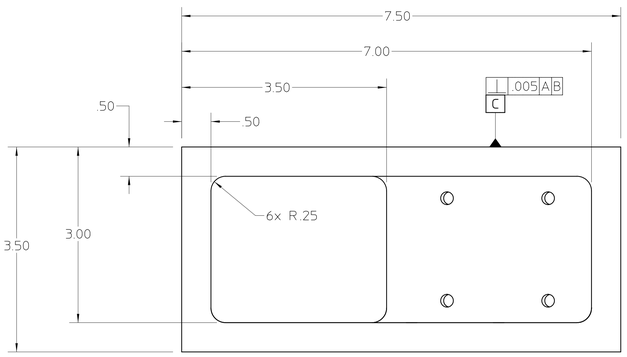

REV	AUTHOR	APPROVER	DATE	CHANGE DESCRIPTION
A	ajdemell	plate	10-19-20	INITIAL REVISION

UNLESS OTHERWISE SPECIFIED
TOLERANCES: .X ± .1 .XX ± .02 .XXX ± .010
FRACTIONS: ± -/--
ANGLES: ± 0.25°/INCH
MACH. SURFS.: 125√ OR BETTER
REF: ASME Y14.5M-1994, THREADS ARE CLASS 2
BREAK EDGES .016 MAX. ON MACHINED WORK
REMOVE BURRS, WELD SPLATTER & LOOSE SCALE

MAT 2: . NOTES:
MAT 1: . STAINLESS STEEL 304 NOTES:

PROJECT NAME: Advanced Light Source
UNIQUE NUMBER: AL-0011-6467
DO NOT SCALE PRINT
SCALE: 1 : 1
CATEGORY CODE: AL 4.160
THIRD ANGLE PROJECTION

ERNEST ORLANDO LAWRENCE
BERKELEY NATIONAL LABORATORY
UNIVERSITY OF CALIFORNIA

ALS - INSERTION DEVICE BEAMLINES
BL 6.0 FRONT END
7.8° MOUNTING BRACKET

SHEET 1 OF 1 | SIZE: E | DWG NO: 26B754 | REV: A

AUTO GENERATED PDF
Oct 19 2004 16:03:03 PDT