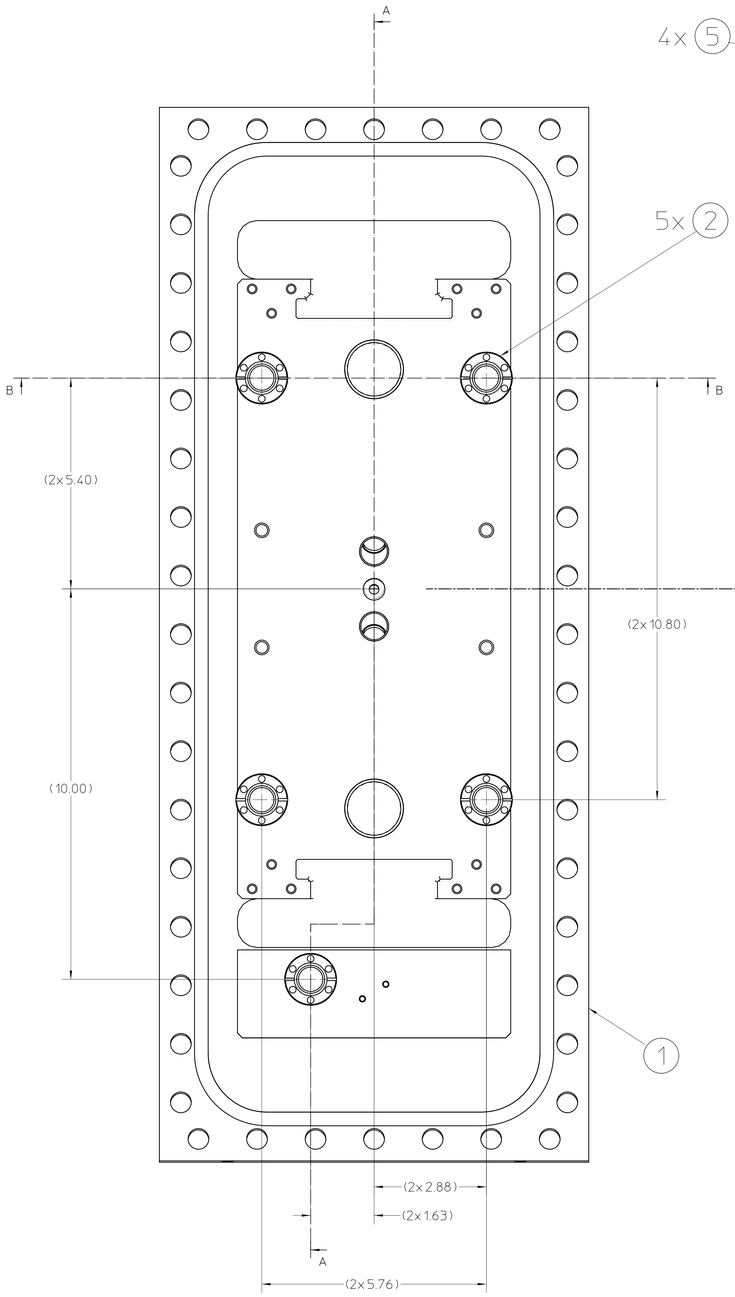

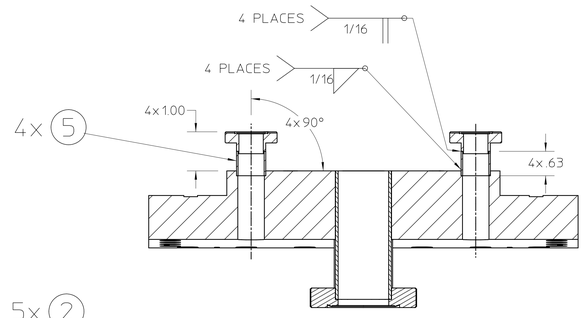

SECTION B-B

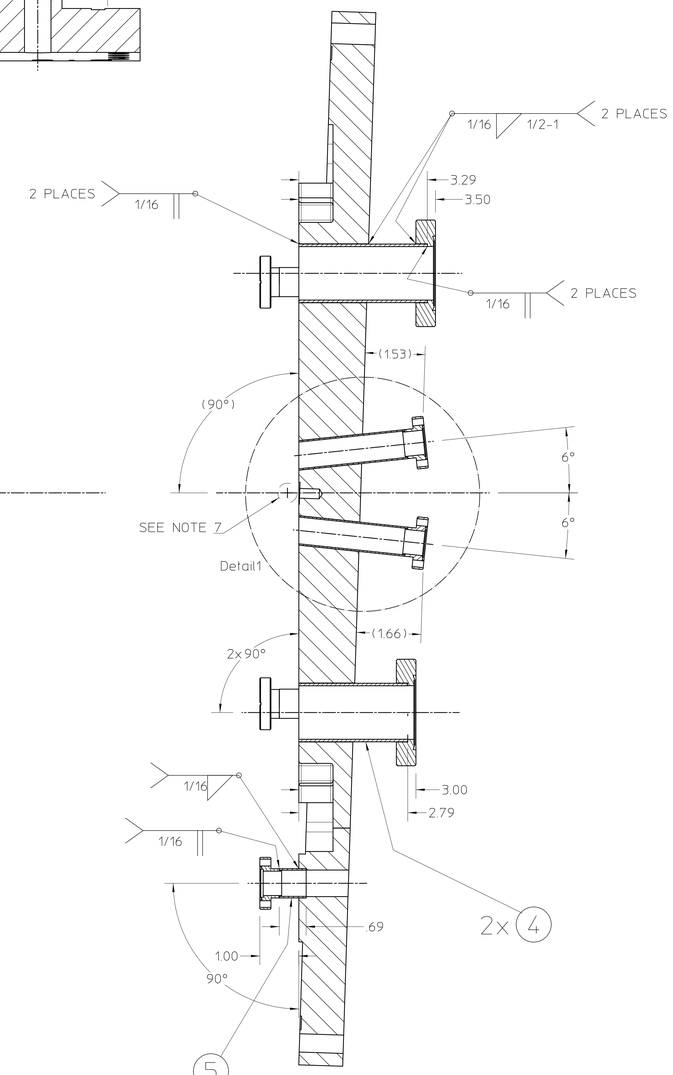

SECTION A-A

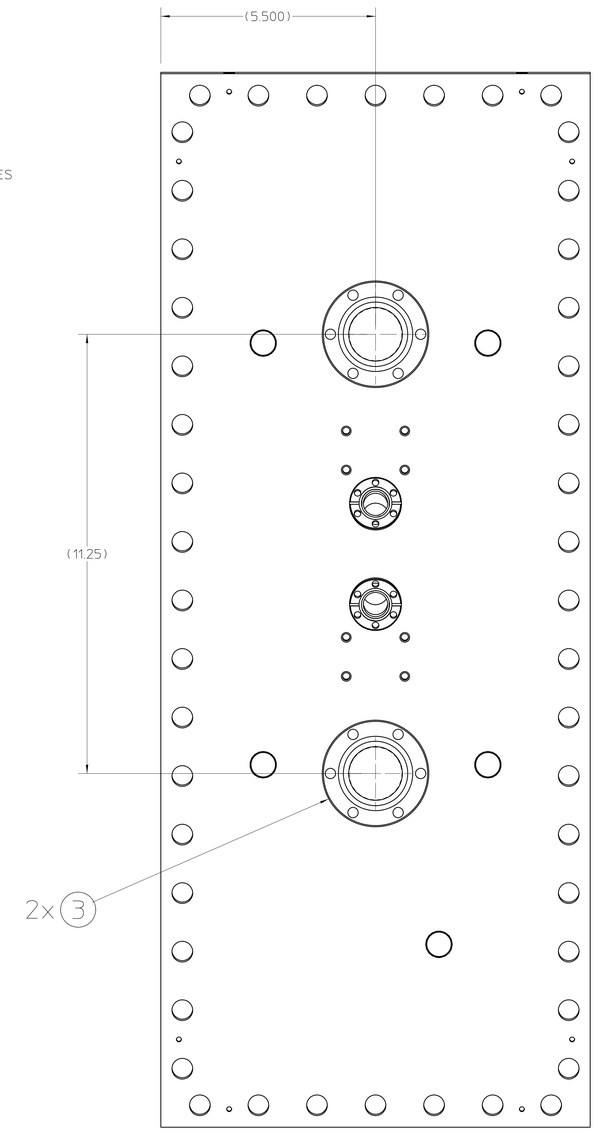

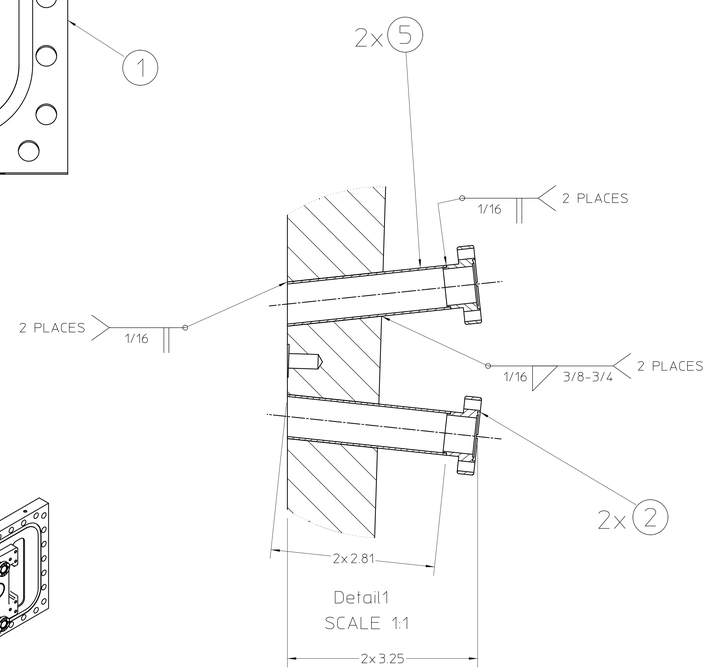

Detail1
SCALE 1:1

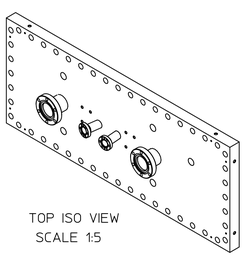

TOP ISO VIEW
SCALE 1:5

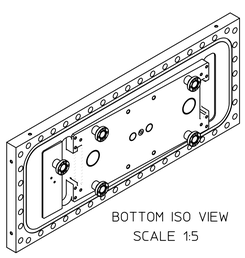

BOTTOM ISO VIEW
SCALE 1:5

NOTES (UNLESS OTHERWISE SPECIFIED)

1. ALL DIMENSIONS APPLY AFTER WELDING.
2. ALL DIMENSIONS ARE IN INCHES UNLESS OTHERWISE NOTED.
3. FINISHED ASSEMBLY TO BE VACUUM TIGHT. LEAK RATE LESS THAN 2 X 10^-9 STD. ATM.- CC PER SECOND HELIUM.
4. THIS PART IS A COMPONENT OF A UHV WELDMENT. ALL CLEANING AND HANDLING IS TO BE ACCORDING TO LBL SPEC NO M20013. HANDLE ALL ITEMS WITH ULTRA HIGH VACUUM TECHNIQUES.
5. PROTECT FINISHED SEALING SURFACE FROM ALL DAMAGE. TAKE CARE NOT TO DING, SCRATCH, DENT, OR OTHERWISE MARK ANY MACHINED SURFACE.
6. PROTECT CONFLAT FLANGE KNIFE EDGE AT ALL TIMES.
7. REFER TO LBNL DRAWING 26B706 FOR DATUM LOCATION.

REQD	ITEM	PART NO.	DESCRIPTION
7	5		TUBE, 0.75" O.D. X .035 WALL, 304 STN. STL., MDC #480003 OR EQUIV.
2	4		TUBE, 1.50" O.D. X .065 WALL, 304 STN. STL., MDC #480006 OR EQUIV.
2	3		CONFLAT FLANGE, 2.75 O.D. 1.75 I.D., MDC #110014 OR EQUIV.
7	2		CONFLAT FLANGE, 1.33 O.D. .625 I.D., MDC #110004 OR EQUIV.
1	1	26B706	MIRROR MOUNTING FLANGE

REV	AUTHOR	APPROVER	DATE	CHANGE DESCRIPTION
A	ajdemell	ajdemell	09-16-20	INITIAL REVISION

UNLESS OTHERWISE SPECIFIED
TOLERANCES
.X± - .XX± .02 .XXX± ---
FRACTIONS: ± -/--
ANGLES: ± 0.25°/INCH
MACH. SURFS.: 125 OR BETTER
REF: ASME Y14.5M-1994, THREADS ARE CLASS 2
BREAK EDGES .016 MAX. ON MACHINED WORK
REMOVE BURRS, WELD SPLATTER & LOOSE SCALE

PROJECT NAME:
Advanced Light Source
UNIQUE NUMBER: AL-0010-7910
DO NOT SCALE PRINT
SCALE: 1 : 1.5
CATEGORY CODE: AL 4160
THIRD ANGLE PROJECTION

ERNEST ORLANDO LAWRENCE
BERKELEY NATIONAL LABORATORY
UNIVERSITY OF CALIFORNIA
BERKELEY LAB

ALS - INSERTION DEVICE BEAMLINES
BL 6.0 FRONT END
M1 MOUNTING FLANGE WELDMENT

SHEET 1 OF 1 | SIZE: E | DWG NO: 26B730 | REV A

AUTO GENERATED PDF
Sep 16 2004 12:11:38 PDT