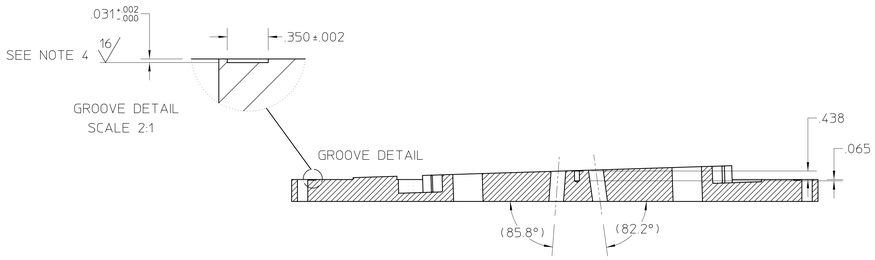

SECTION A-A

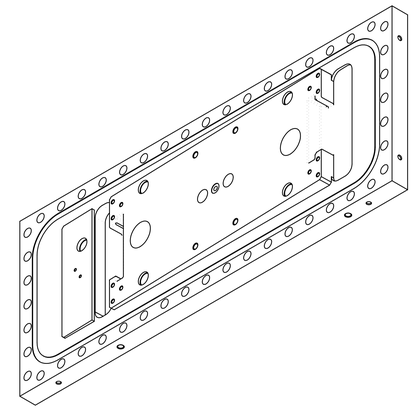

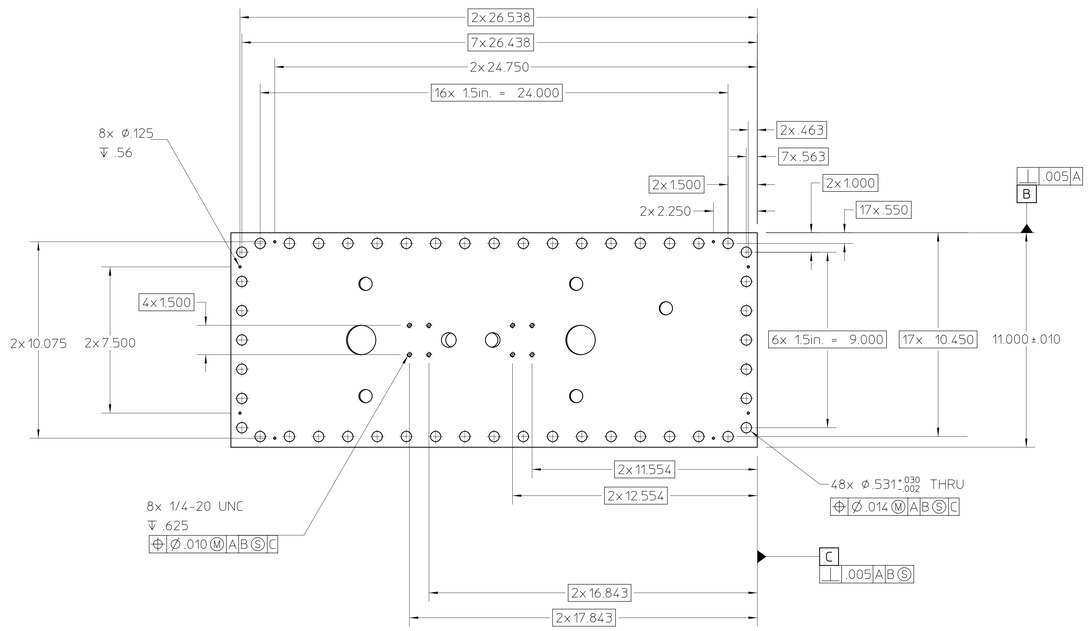

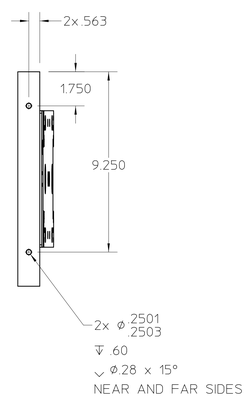

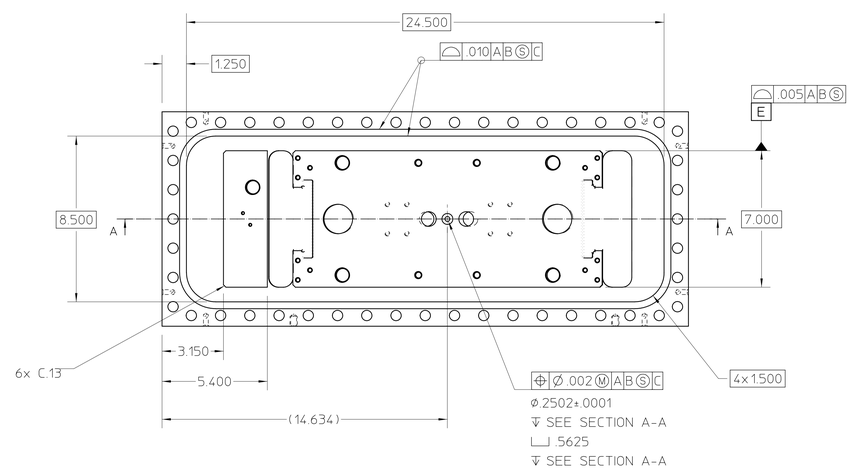

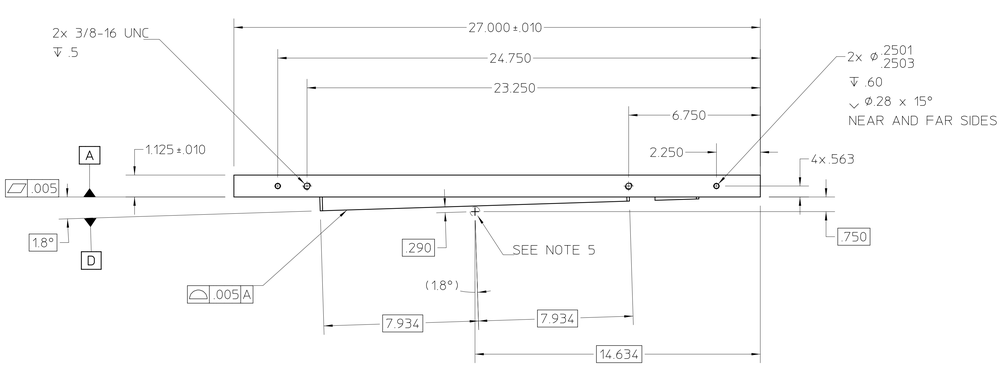

NOTES (UNLESS OTHERWISE SPECIFIED)

1. ALL DIMENSIONS APPLY AFTER WELDING DONE. SEE LBL DWG NO 26B730 FOR FABRICATION REFERENCES.
2. ALL DIMENSIONS ARE IN INCHES UNLESS OTHERWISE NOTED.
3. THIS PART IS A COMPONENT OF A UHV WELDMENT. ALL CLEANING AND HANDLING IS TO BE ACCORDING TO LBL SPEC NO M20013.
4. PROTECT FINISHED SEALING SUFACE FROM ALL DAMAGE. DINGS, DENTS AND SCRATCHES WILL NOT BE ACCEPTED.
5. HALF INCH DIAMETER TOOLING BALL OPTIONAL.

REV	AUTHOR	APPROVER	DATE	CHANGE DESCRIPTION
A	ajdemell	ajdemell	09-16-20	INITIAL REVISION

UNLESS OTHERWISE SPECIFIED
TOLERANCES: X± .03 .XX± .01 .XXX± .005
FRACTIONS: ± -/--
ANGLES: ± 0.125°/INCH
MACH. SURFS.: 63 ✓ OR BETTER
REF: ASME Y14.5M-1994, THREADS ARE CLASS 2
BREAK EDGES .016 MAX. ON MACHINED WORK
REMOVE BURRS, WELD SPLATTER & LOOSE SCALE

MAT 2: . NOTES:
MAT 1: PLATE, STAINLESS STEEL 304 NOTES:

PROJECT NAME: Advanced Light Source
UNIQUE NUMBER: AL-0010-7895
DO NOT SCALE PRINT
CATEGORY CODE: AL 4160
SCALE: 1 : 3
THIRD ANGLE PROJECTION

ERNEST ORLANDO LAWRENCE
BERKELEY NATIONAL LABORATORY
UNIVERSITY OF CALIFORNIA
BERKELEY LAB

ALS - INSERTION DEVICE BEAMLINES
BL 6.0 FRONT END
MIRROR MOUNTING FLANGE

SHEET 1 OF 2 | SIZE: E | DWG NO: 26B706 | REV A

AUTO GENERATED PDF
Sep 16 2004 11:31:44 PDT

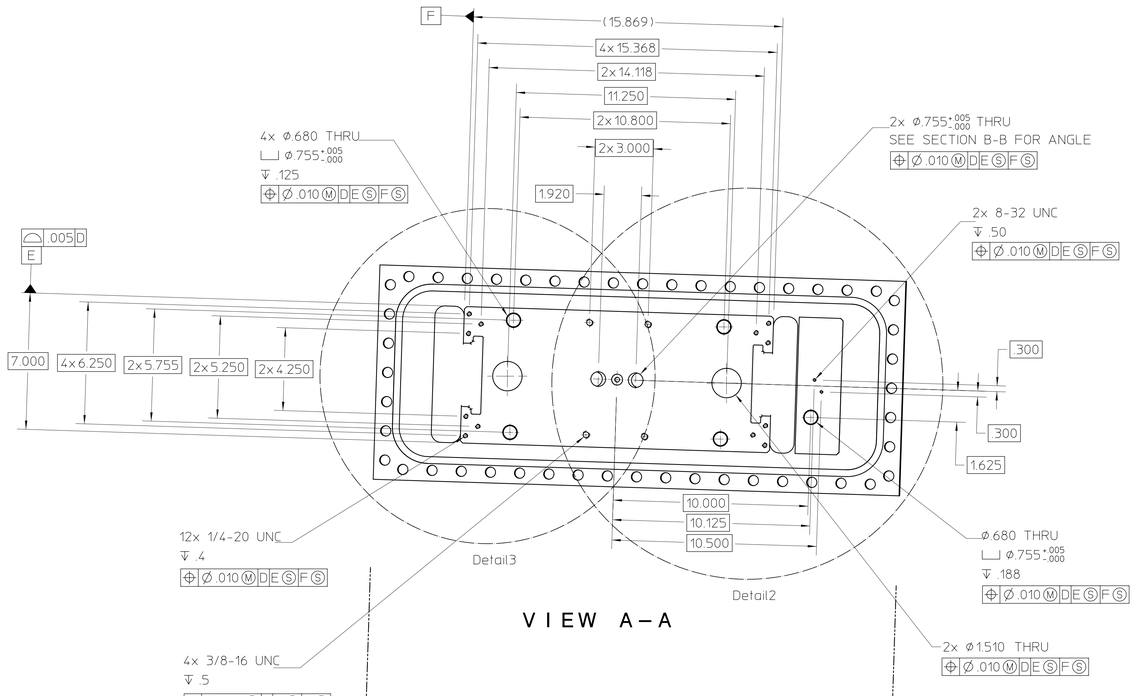

VIEW A–A

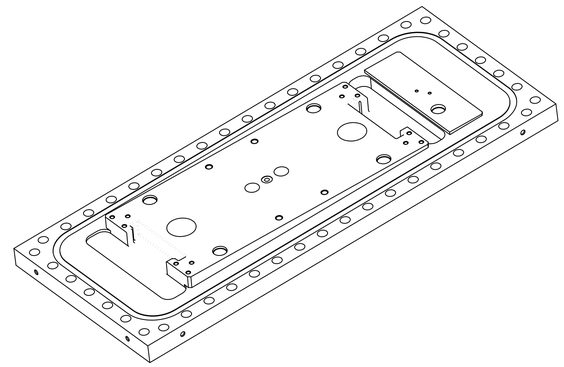

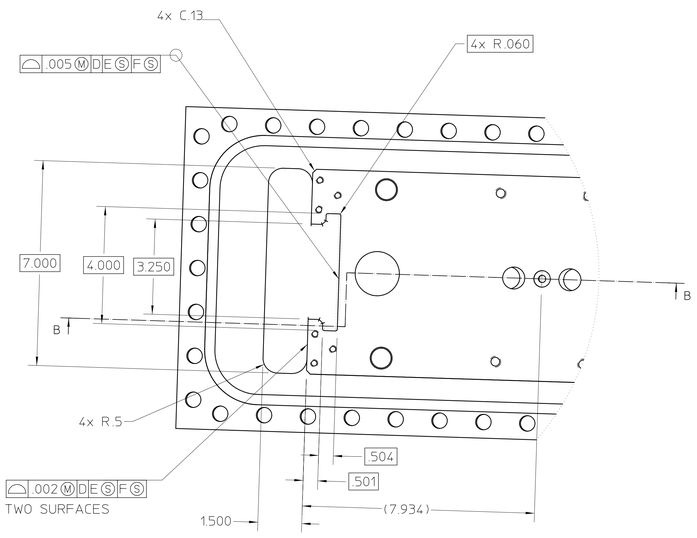

Detail3
SCALE 1:2

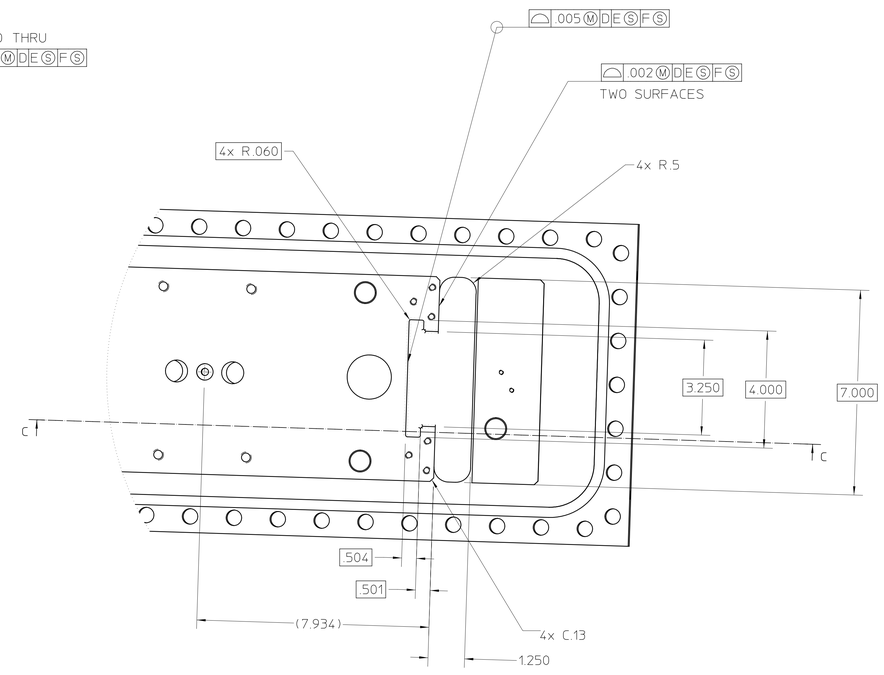

Detail2
SCALE 1:2

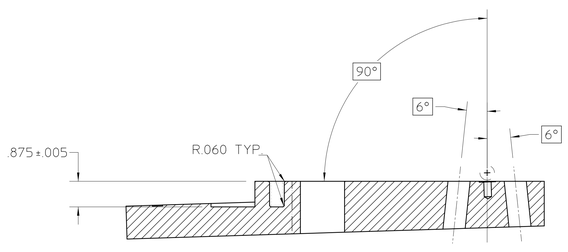

SECTION B-B
SCALE 1:2

NOTES (UNLESS OTHERWISE SPECIFIED)

1. ALL DIMENSIONS APPLY AFTER WELDING DONE. SEE LBL DWG NO 26B730 FOR FABRICATION REFERENCES.
2. ALL DIMENSIONS ARE IN INCHES UNLESS OTHERWISE NOTED.
3. THIS PART IS A COMPONENT OF A UHV WELDMENT. ALL CLEANING AND HANDLING IS TO BE ACCORDING TO LBL SPEC NO M20013.
4. PROTECT FINISHED SEALING SUFACE FROM ALL DAMAGE. DINGS, DENTS AND SCRATCHES WILL NOT BE ACCEPTED.
5. HALF INCH DIAMETER TOOLING BALL OPTIONAL.

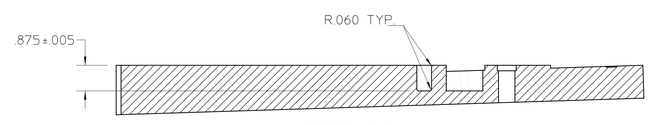

SECTION C-C
SCALE 1:2

REV	AUTHOR	APPROVER	DATE	CHANGE DESCRIPTION
A	ajdemell	ajdemell	09-16-20	INITIAL REVISION

UNLESS OTHERWISE SPECIFIED
TOLERANCES: X± .03 .XX± .01 .XXX± .005; FRACTIONS: ± ~/--; ANGLES: ± 0.125°/INCH; MACH. SURFS.: 63 ✓ OR BETTER
REF ASME Y14.5M-1994, THREADS ARE CLASS 2
BREAK EDGES .016 MAX. ON MACHINED WORK
REMOVE BURRS, WELD SPLATTER & LOOSE SCALE

MAT 2: . NOTES:
MAT 1: PLATE, STAINLESS STEEL 304 NOTES:

PROJECT NAME: Advanced Light Source
UNIQUE NUMBER: AL-0010-7895
DO NOT SCALE PRINT
SCALE: 1 : 3
CATEGORY CODE: AL 4160
THIRD ANGLE PROJECTION

ERNEST ORLANDO LAWRENCE BERKELEY NATIONAL LABORATORY
UNIVERSITY OF CALIFORNIA
ALS - INSERTION DEVICE BEAMLINES
BL 6.0 FRONT END
MIRROR MOUNTING FLANGE

SHEET 2 OF 2 | SIZE: E | DWG NO: 26B706 | REV A

AUTO GENERATED PDF
Sep 16 2004 11:31:53 PDT