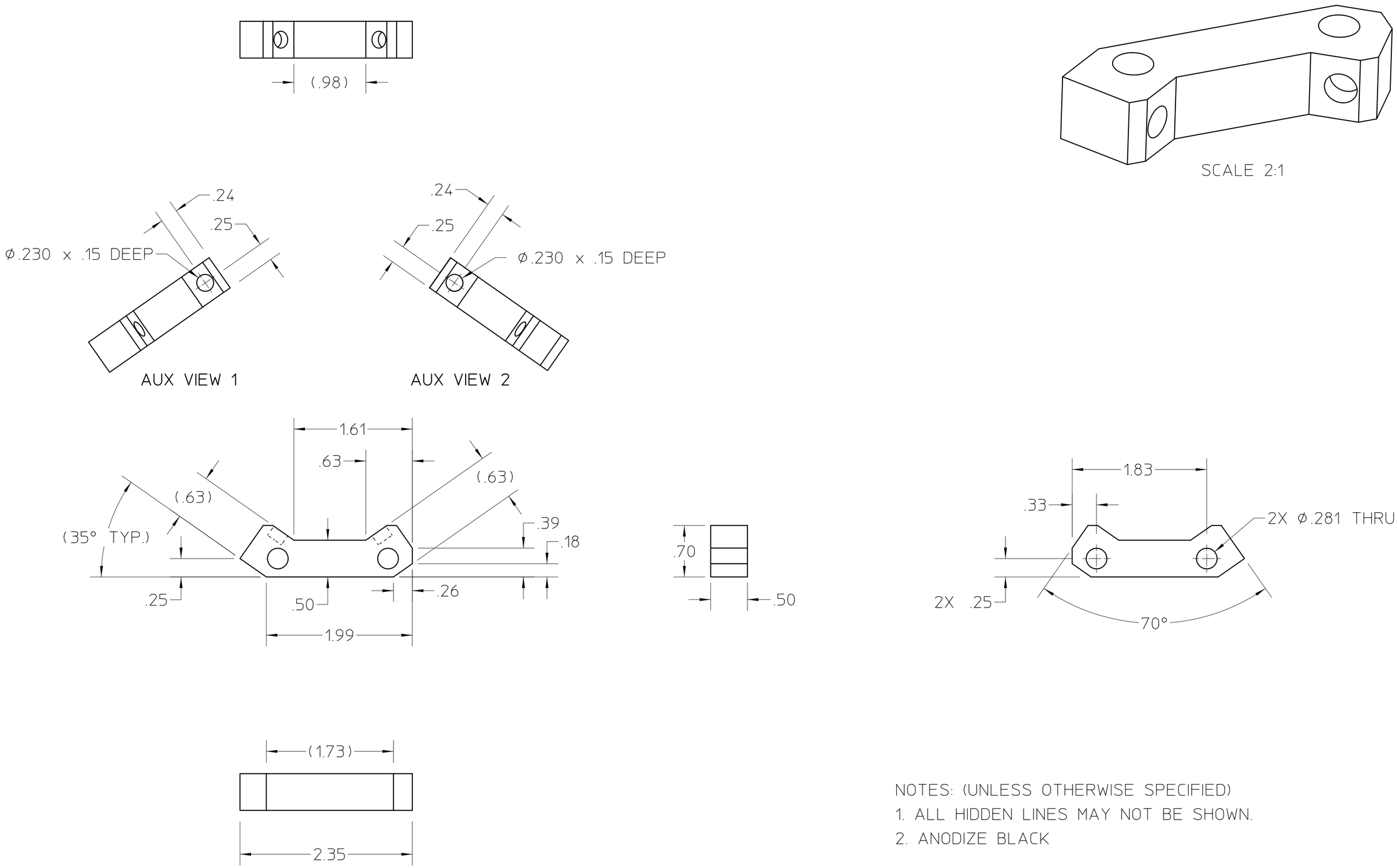

NOTES: (UNLESS OTHERWISE SPECIFIED)
1. ALL HIDDEN LINES MAY NOT BE SHOWN.
2. ANODIZE BLACK

REV	AUTHOR	APPROVER	DATE	CHANGE DESCRIPTION
A	ajdemell	ajdemell	01-15-20	INITIAL REVISION

UNLESS OTHERWISE SPECIFIED
TOLERANCES: .X± - .XX±.01 .XXX±.005; FRACTIONS: ± -/--; ANGLES: ± 1.0°/INCH; MACH. SURFS.: 125✓ OR BETTER
REF:ASME Y14.5M-1994, THREADS ARE CLASS 2
BREAK EDGES .016 MAX. ON MACHINED WORK
REMOVE BURRS, WELD SPLATTER & LOOSE SCALE

MAT 2: , NOTES:
MAT 1: BLOCK, ALUMINUM 6061 NOTES:

PROJECT NAME: Advanced Light Source
UNIQUE NUMBER: AL-0007-4020
DO NOT SCALE PRINT SCALE: 1 : 1
CATEGORY CODE: AL6193
THIRD ANGLE PROJECTION

ERNEST ORLANDO LAWRENCE BERKELEY NATIONAL LABORATORY
UNIVERSITY OF CALIFORNIA
ALS - BEND MAGNET BEAMLINES
BL 12.3.1 END STATION
CLAMP RING SPRING MOUNT
SHEET 1 OF 1 SIZE: C DWG NO: 26B198 REV A

AUTO GENERATED PDF
Jan 15 2004 15:41:32 PST