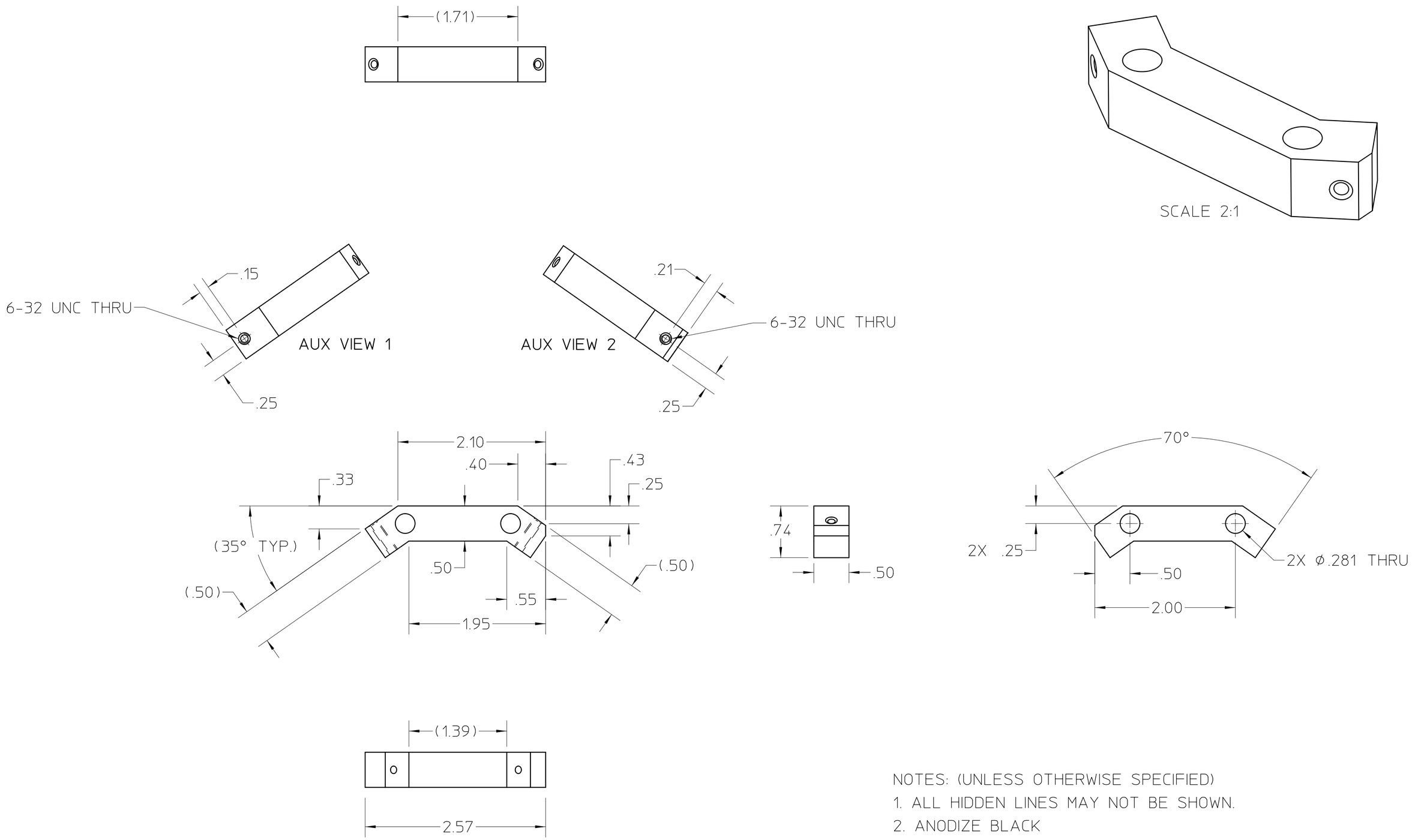

NOTES: (UNLESS OTHERWISE SPECIFIED)
1. ALL HIDDEN LINES MAY NOT BE SHOWN.
2. ANODIZE BLACK

MAT 2: , NOTES:

MAT 1: BLOCK, ALUMINUM 6061 NOTES:

REV	AUTHOR	APPROVER	DATE	CHANGE DESCRIPTION
A	ajdemell	ajdemell	01-15-20	INITIAL REVISION

UNLESS OTHERWISE SPECIFIED
TOLERANCES: .X± - .XX±.01 .XXX±.005; FRACTIONS: ± -/--; ANGLES: ± 1.0°/INCH; MACH. SURFS.: 125✓ OR BETTER

REF:ASME Y14.5M-1994, THREADS ARE CLASS 2
BREAK EDGES .016 MAX. ON MACHINED WORK
REMOVE BURRS, WELD SPLATTER & LOOSE SCALE

PROJECT NAME: Advanced Light Source
UNIQUE NUMBER: AL-0007-4021
DO NOT SCALE PRINT
SCALE: 1 : 1
CATEGORY CODE: AL6193
THIRD ANGLE PROJECTION

ERNEST ORLANDO LAWRENCE
BERKELEY NATIONAL LABORATORY
UNIVERSITY OF CALIFORNIA

ALS - BEND MAGNET BEAMLINES
BL 12.3.1 END STATION
CLAMP RING SCREW MOUNT

SHEET 1 OF 1 | SIZE: C | DWG NO: 26B197 | REV A

AUTO GENERATED PDF
Jan 15 2004 15:41:52 PST