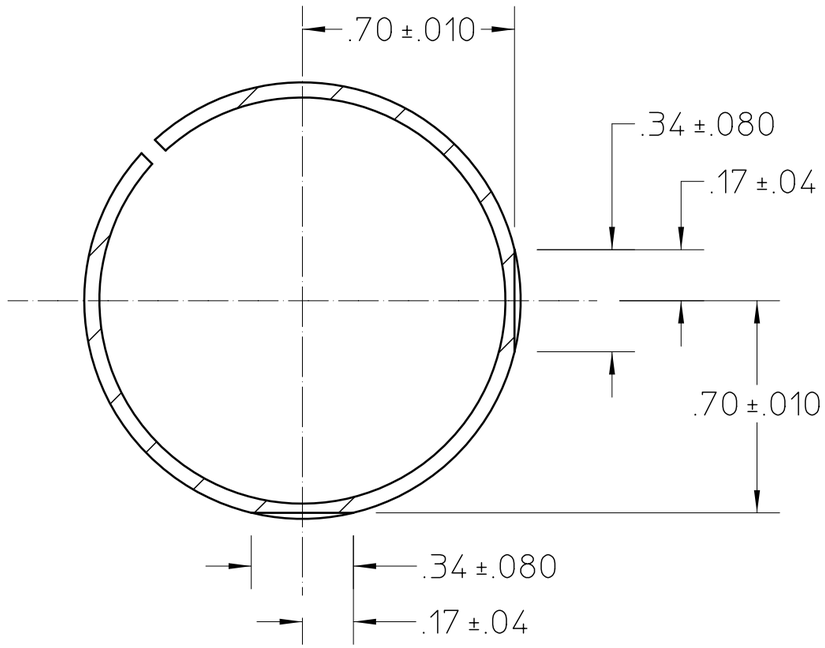

SECTION A-A
SCALE 2:1

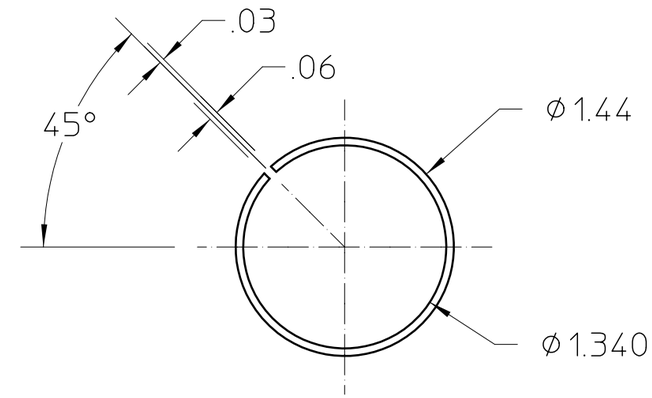

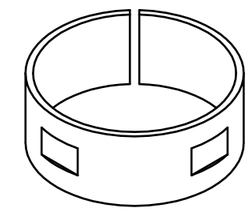

ISO VIEW

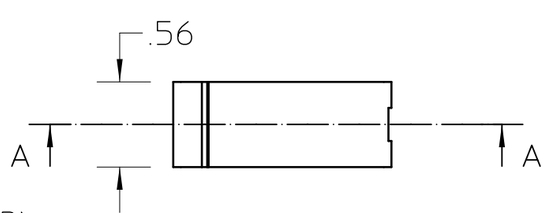

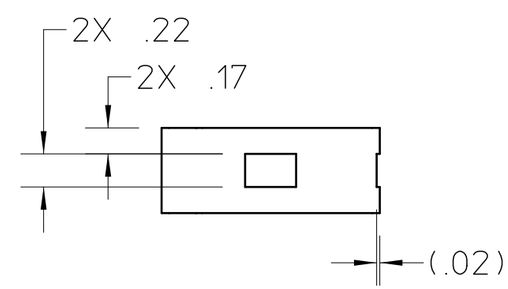

NOTES: (UNLESS OTHERWISE SPECIFIED)
1. ALL HIDDEN LINES MAY NOT BE SHOWN.
2. ANODIZE BLACK

REV	AUTHOR	APPROVER	DATE	CHANGE DESCRIPTION
A	ajdemell	ajdemell	12-09-20	INITIAL REVISION

MAT 2: , NOTES:
MAT 1: TUBE, ALUMINUM 6061 NOTES:

UNLESS OTHERWISE SPECIFIED
TOLERANCES: .X± .- .XX±.01 .XXX±.005
FRACTIONS: ± -/--
ANGLES: ± 1.0°/INCH
MACH. SURFS.: 125✓ OR BETTER
REF:ASME Y14.5M-1994, THREADS ARE CLASS 2
BREAK EDGES .016 MAX. ON MACHINED WORK
REMOVE BURRS, WELD SPLATTER & LOOSE SCALE

PROJECT NAME: Advanced Light Source
UNIQUE NUMBER: AL-0006-5017
DO NOT SCALE PRINT SCALE: 1 : 1
CATEGORY CODE: AL6193
THIRD ANGLE PROJECTION

ERNEST ORLANDO LAWRENCE
BERKELEY NATIONAL LABORATORY
UNIVERSITY OF CALIFORNIA

ALS - BEND MAGNET BEAMLINES
BL 12.3.1 END STATION
MICROSCOPE CLAMP RING

SHEET 1 OF 1 | SIZE: B | DWG NO: 26B173 | REV A

AUTO GENERATED PDF
Dec 09 2003 09:11:21 PST