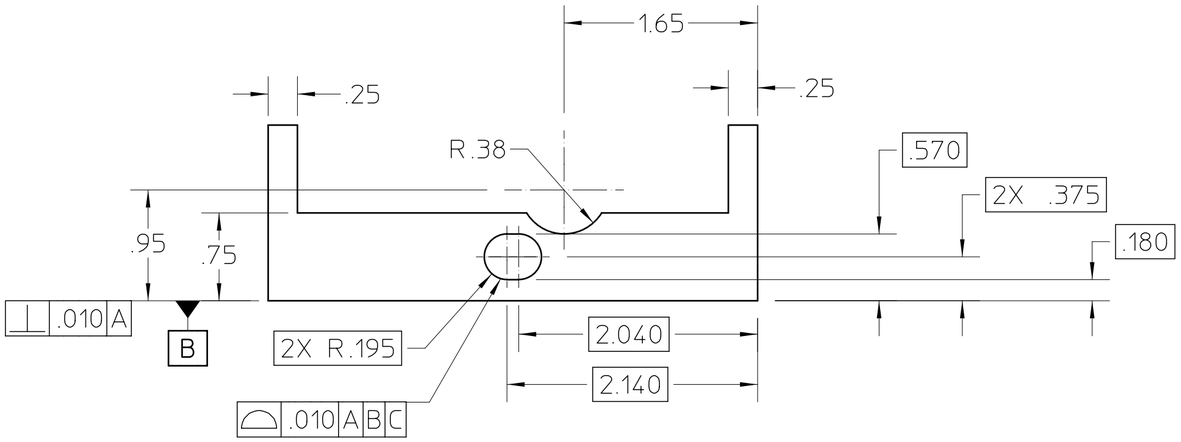


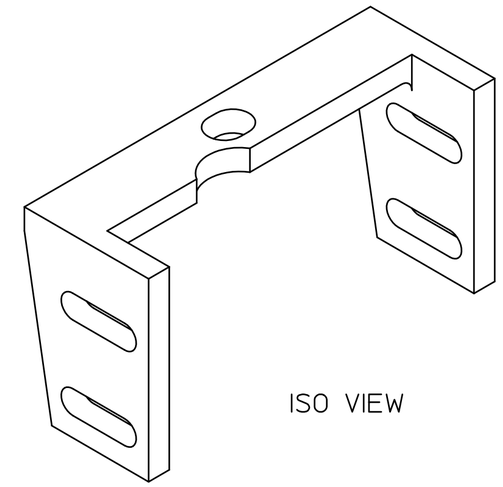


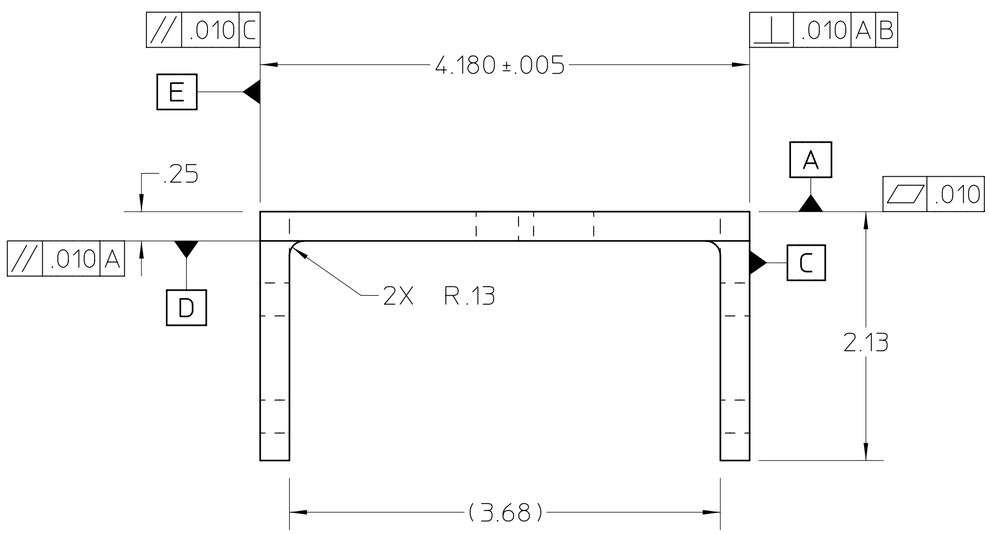


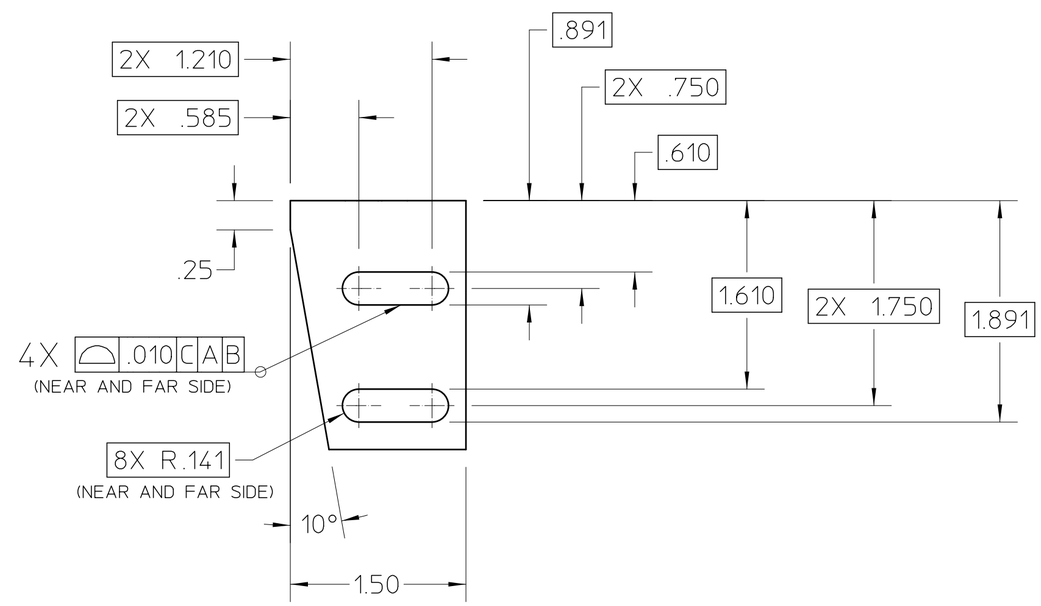


NOTES: (UNLESS OTHERWISE SPECIFIED)
1. ALL HIDDEN LINES MAY NOT BE SHOWN.
2. ANODIZE BLACK

| REV | AUTHOR | APPROVER | DATE | CHANGE DESCRIPTION |
|---|---|---|---|---|
| A | ajdemell | ajdemell | 12-09-20 | INITIAL REVISION |

UNLESS OTHERWISE SPECIFIED
TOLERANCES: .X± - .XX±.01 .XXX±.005; FRACTIONS: ± -/--; ANGLES: ± 1.0°/INCH; MACH. SURFS.: 125 OR BETTER
REF: ASME Y14.5M-1994, THREADS ARE CLASS 2
BREAK EDGES .016 MAX. ON MACHINED WORK
REMOVE BURRS, WELD SPLATTER & LOOSE SCALE

MAT 2: , NOTES:
MAT 1: BLOCK, ALUMINUM 6061 NOTES:

PROJECT NAME: Advanced Light Source
UNIQUE NUMBER: AL-0006-4982
DO NOT SCALE PRINT SCALE: 1 : 1
CATEGORY CODE: AL6193
THIRD ANGLE PROJECTION

ERNEST ORLANDO LAWRENCE BERKELEY NATIONAL LABORATORY
UNIVERSITY OF CALIFORNIA
ALS - BEND MAGNET BEAMLINES
BL 12.3.1 END STATION
MICROSCOPE JACKING SCREW BRACKET
SHEET 1 OF 1 SIZE: C DWG NO: 26B172 REV A

AUTO GENERATED PDF
Dec 09 2003 09:11:38 PST