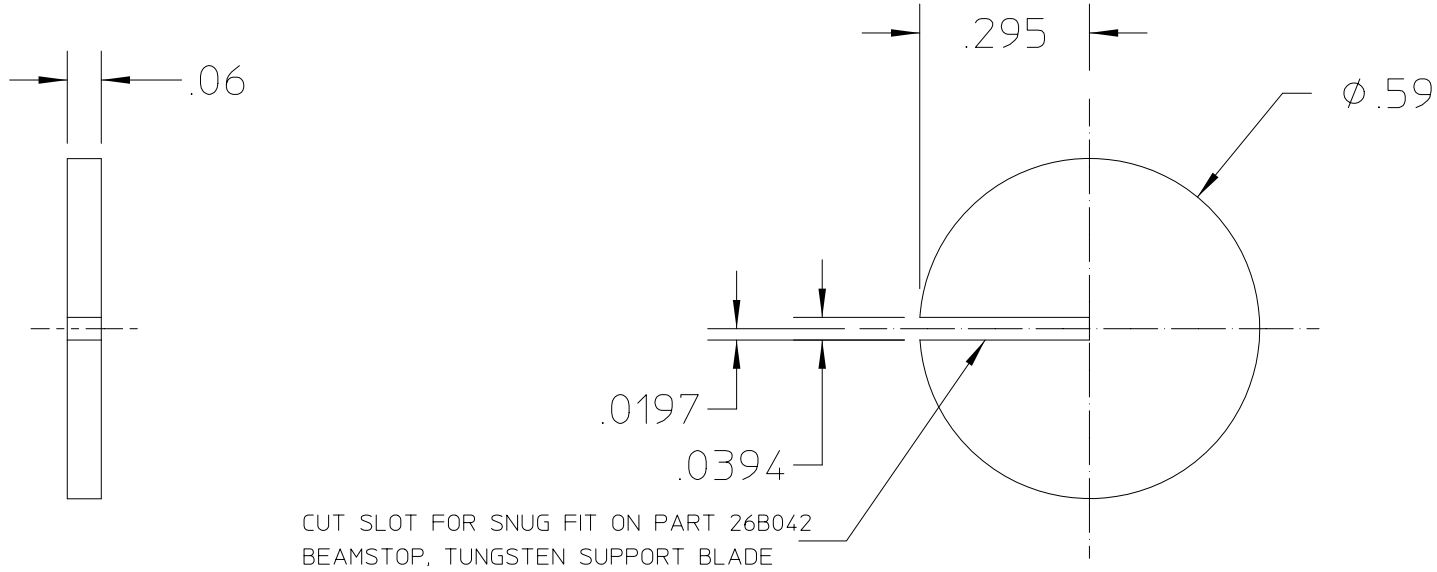

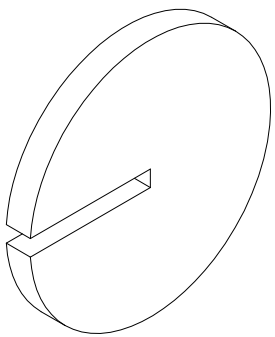

REV	AUTHOR	APPROVER	DATE	CHANGES
A	ajdemell	ajdemell	10-21-20	INITIAL

UNLESS OTHERWISE SPECIFIED
REF: ASME Y14.5M-1994, THREADS ARE CLASS 2
BREAK EDGES .016 MAX. ON MACHINED WORK
REMOVE BURRS, WELD SPLATTER & LOOSE SCALE

TOLERANCES: .X±.- .XX±.01 .XXX±.005
FRACTIONS: ± -/--
ANGLES: ± -.-°/INCH
MACH. SURFS.: 125 OR BETTER

MAT 2: , NOTES:
MAT 1: SHEET, ALUMINUM 6061 NOTES:

PROJECT NAME: Advanced Light Source
UNIQUE NUMBER: AL-0005-7923
DO NOT SCALE PRINT
SCALE: 3 : 1
CATEGORY CODE: AL 6193
THIRD ANGLE PROJECTION

ERNEST ORLANDO LAWRENCE
BERKELEY NATIONAL LABORATORY
UNIVERSITY OF CALIFORNIA
BERKELEY LAB

LIGHT SOURCE - BEND MAGNET BEAMLINES
BL 12.3.1 END STATION
BEAMSTOP, ALUMINUM DISK

SHEET 1 OF 1 | SIZE: A | DWG NO: 26B045 | REV A

AUTO GENERATED PDF
Oct 21 2003 08:22:03 PDT