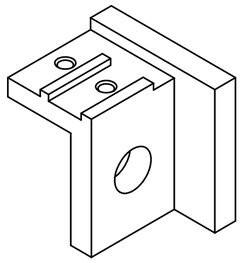

SCALE 2:1

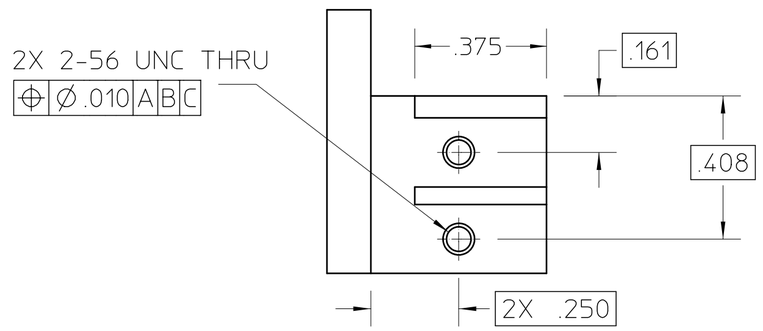

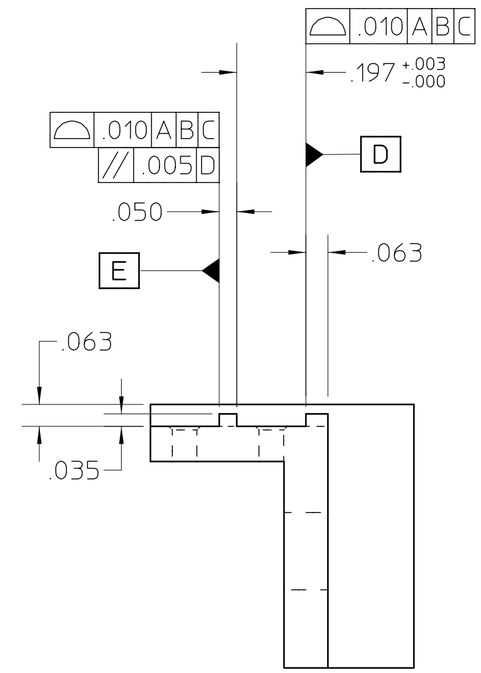

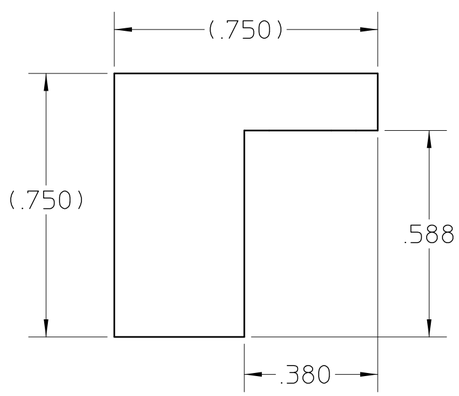

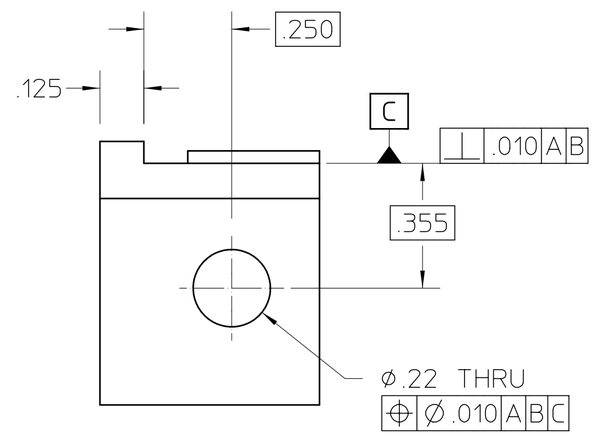

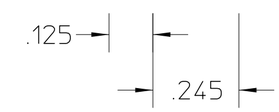

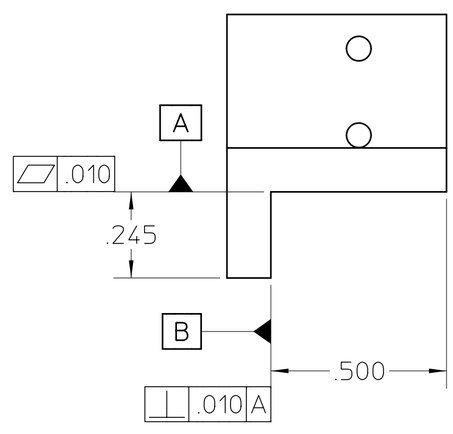

NOTES: (UNLESS OTHERWISE SPECIFIED)
1. ALL HIDDEN LINES MAY NOT BE SHOWN.
2. DEGREASE

REV	AUTHOR	APPROVER	DATE	CHANGE DESCRIPTION
A	ajdemell	ajdemell	10-21-20	INITIAL REVISION

UNLESS OTHERWISE SPECIFIED
TOLERANCES: .X ± .1 .XX ± .01 .XXX ± .005; FRACTIONS: ± -/--; ANGLES: ± -.-°/INCH; MACH. SURFS.: 125 ✓ OR BETTER
REF: ASME Y14.5M-1994, THREADS ARE CLASS 2
BREAK EDGES .016 MAX. ON MACHINED WORK
REMOVE BURRS, WELD SPLATTER & LOOSE SCALE

MAT 2: , NOTES:
MAT 1: BLOCK, ALUMINUM 6061 NOTES:

PROJECT NAME: Advanced Light Source
UNIQUE NUMBER: AL-0005-7920
DO NOT SCALE PRINT SCALE: 3 : 1
CATEGORY CODE: AL6193
THIRD ANGLE PROJECTION

ERNEST ORLANDO LAWRENCE BERKELEY NATIONAL LABORATORY
UNIVERSITY OF CALIFORNIA
LIGHT SOURCE - BEND MAGNET BEAMLINES
BL 12.3.1 END STATION
BEAMSTOP, BLADE MOUNT BLOCK
SHEET 1 OF 1 SIZE: C DWG NO: 26B044 REV A

AUTO GENERATED PDF
Oct 21 2003 08:21:52 PDT