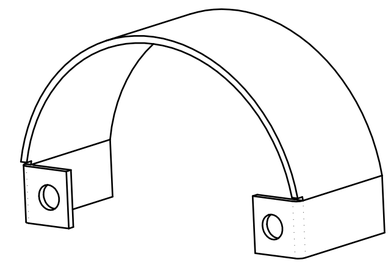

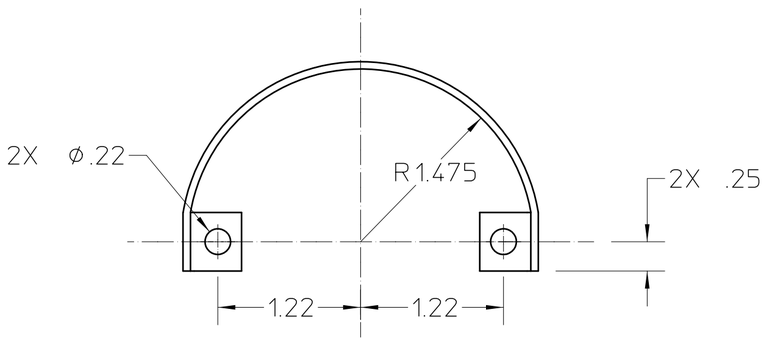

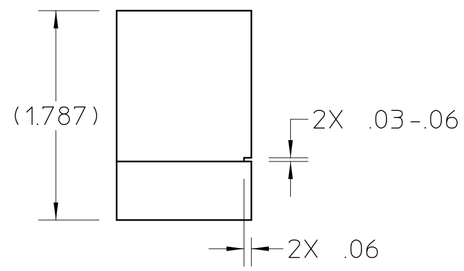

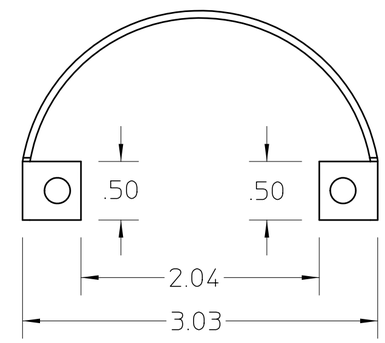

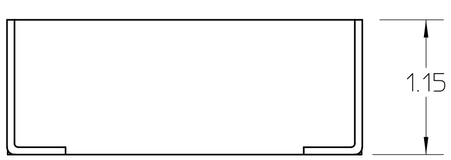

NOTES: (UNLESS OTHERWISE SPECIFIED)

1. MATERIAL: ALUMINUM SHEET, .063 INCH THICK
2. FINISH: ANODIZE BLACK

REV	AUTHOR	APPROVER	DATE	CHANGE DESCRIPTION
A	ajdemell	ajdemell	01-16-20	INITIAL REVISION

UNLESS OTHERWISE SPECIFIED

TOLERANCES: .X±.1 .XX±.02 .XXX±.010; FRACTIONS: ± -/--; ANGLES: ± -.-°/INCH; MACH. SURFS.: 125✓ OR BETTER

REF:ASME Y14.5M-1994, THREADS ARE CLASS 2

BREAK EDGES .016 MAX. ON MACHINED WORK

REMOVE BURRS, WELD SPLATTER & LOOSE SCALE

MAT 2: , NOTES:

MAT 1: SHEET, ALUMINUM 6061 NOTES:

PROJECT NAME: Advanced Light Source

UNIQUE NUMBER: AL-0005-6828

DO NOT SCALE PRINT SCALE: 1:1

CATEGORY CODE: AL6193

THIRD ANGLE PROJECTION

ERNEST ORLANDO LAWRENCE BERKELEY NATIONAL LABORATORY
UNIVERSITY OF CALIFORNIA

LIGHT SOURCE - BEND MAGNET BEAMLINES

BL 12.3.1 END STATION

HE BOX PRISM COVER

SHEET 1 OF 1 | SIZE: C | DWG NO: 26B008 | REV A

AUTO GENERATED PDF
Jan 16 2004 15:51:22 PST