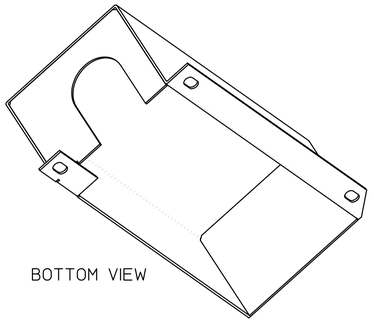

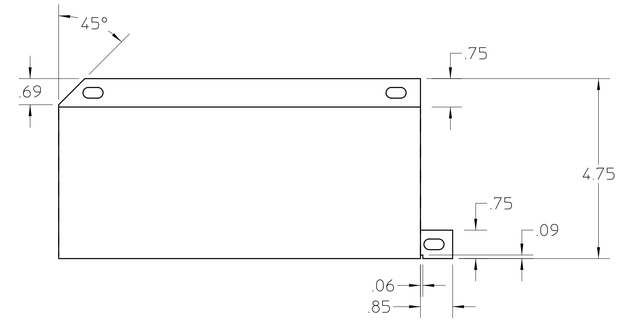

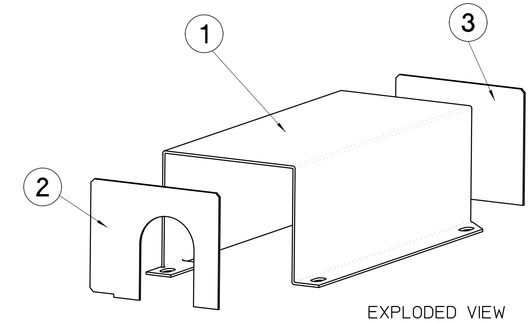

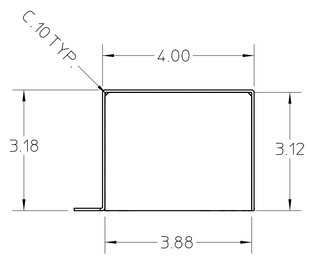

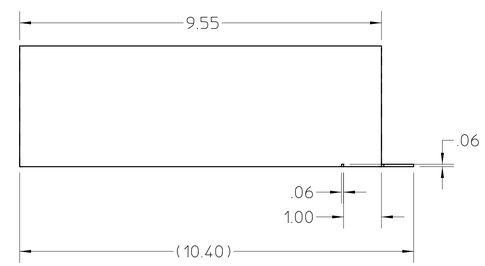

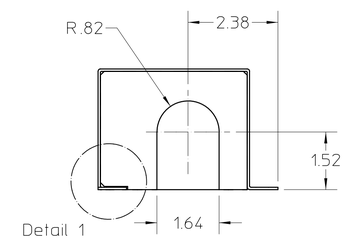

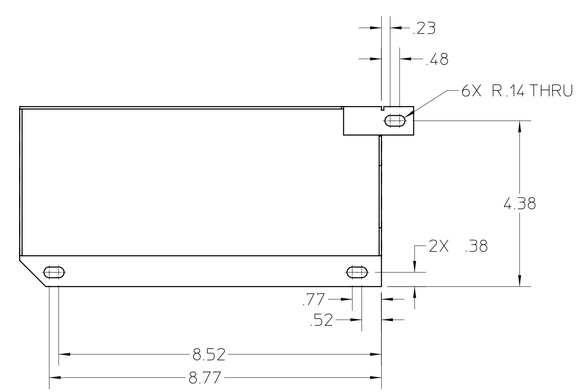

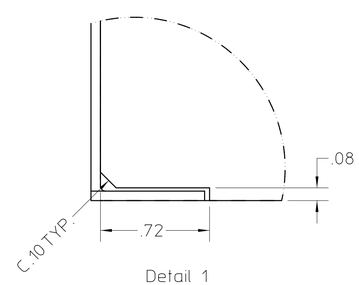

Detail 1
SCALE 2:1
FRONT END PLATE
CUT OUT

NOTES: (UNLESS OTHERWISE SPECIFIED)

1. MATERIAL: ALUMINUM SHEET, .063 INCH THICK
2. TACK WELD END PLATES INTO MAIN COVER
3. FINISH: ANODIZE BLACK

REQD	ITEM	PART NO.	DESCRIPTION
1	3		REAR END PLATE
1	2		FRONT END PLATE
1	1		MAIN COVER

REV	AUTHOR	APPROVER	DATE	CHANGE DESCRIPTION
A	ajdemell	ajdemell	01-16-20	INITIAL REVISION

UNLESS OTHERWISE SPECIFIED
TOLERANCES: .X ± .1 .XX ± .02 .XXX ± .010
FRACTIONS: ± -/--
ANGLES: ± 1.0°/INCH
MACH. SURFS.: 125 √ OR BETTER
REF: ASME Y14.5M-1994, THREADS ARE CLASS 2
BREAK EDGES .016 MAX. ON MACHINED WORK
REMOVE BURRS, WELD SPLATTER & LOOSE SCALE

PROJECT NAME: Advanced Light Source
UNIQUE NUMBER: AL-0005-6718
DO NOT SCALE PRINT
CATEGORY CODE: AL 6193
SCALE: 1 : 2
THIRD ANGLE PROJECTION

ERNEST ORLANDO LAWRENCE
BERKELEY NATIONAL LABORATORY
UNIVERSITY OF CALIFORNIA

LIGHT SOURCE - BEND MAGNET BEAMLINES
BL 12.3.1 END STATION
CAMERA COVER ASSEMBLY

SHEET 1 OF 1 | SIZE: D | DWG NO: 26B007 | REV A

AUTO GENERATED PDF
Jan 16 2004 15:50:58 PST