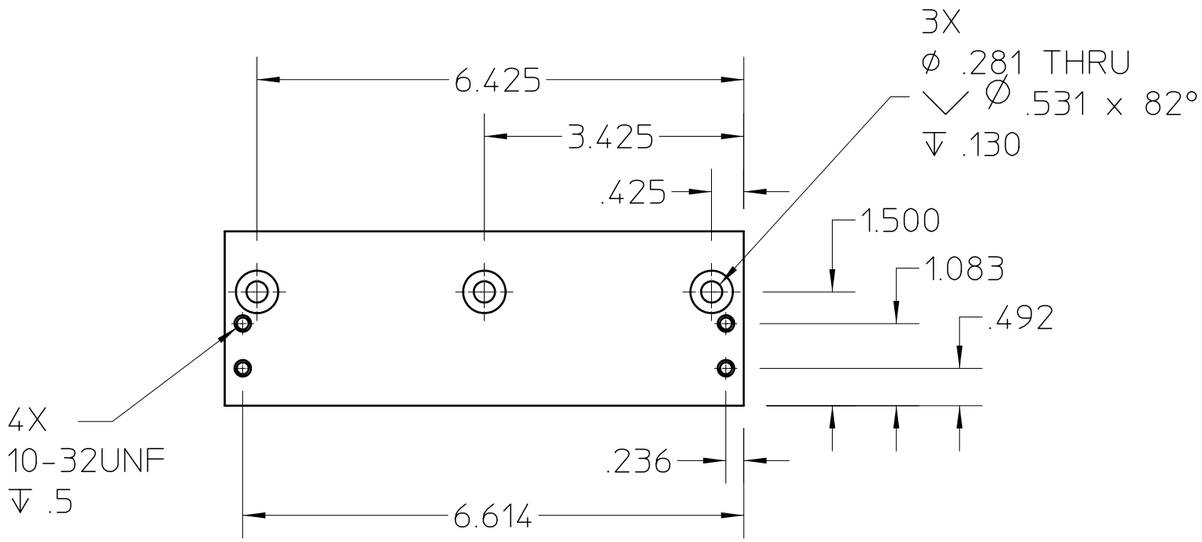

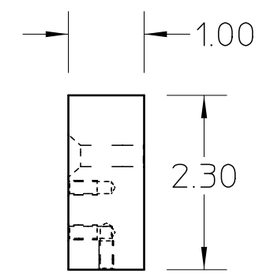

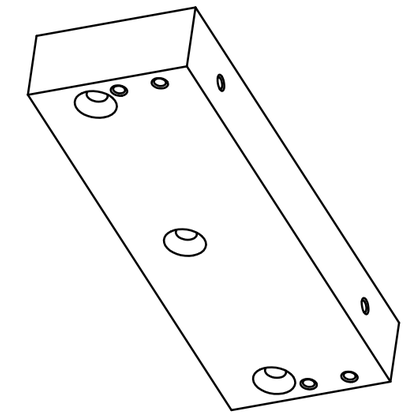

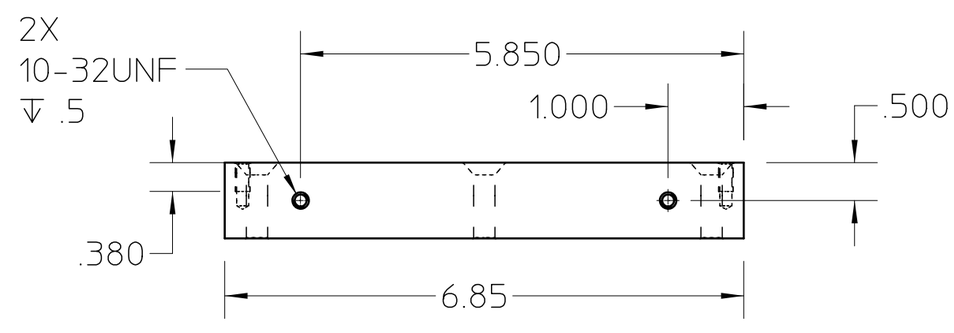

NOTES: (UNLESS OTHERWISE SPECIFIED)

1. MATERIAL: ALUMINUM 6061
2. ALL HIDDEN LINES MAY NOT BE SHOWN.
3. DEGREASE

REV	AUTHOR	APPROVER	DATE	CHANGE DESCRIPTION
A	ajdemell	ajdemell	01-16-20	INITIAL REVISION

UNLESS OTHERWISE SPECIFIED
TOLERANCES: .X± .- .XX± .-- .XXX± .010; FRACTIONS: ± -/--; ANGLES: ± -.-°/INCH; MACH. SURFS.: 125✓ OR BETTER
REF: ASME Y14.5M-1994, THREADS ARE CLASS 2
BREAK EDGES .016 MAX. ON MACHINED WORK
REMOVE BURRS, WELD SPLATTER & LOOSE SCALE

MAT 2: , NOTES:
MAT 1: BLOCK, ALUMINUM 6061 NOTES:

PROJECT NAME: Advanced Light Source
UNIQUE NUMBER: AL-0005-5443
DO NOT SCALE PRINT
SCALE: 1:2
CATEGORY CODE: AL6193
THIRD ANGLE PROJECTION

ERNEST ORLANDO LAWRENCE BERKELEY NATIONAL LABORATORY
UNIVERSITY OF CALIFORNIA
LIGHT SOURCE - BEND MAGNET BEAMLINES
BL 12.3.1 END STATION
HORIZONTAL CABLE CARRIER MOUNTING ADAPTOR
SHEET 1 OF 1 | SIZE: B | DWG NO: 26B005 | REV A

AUTO GENERATED PDF
Jan 16 2004 15:50:42 PST