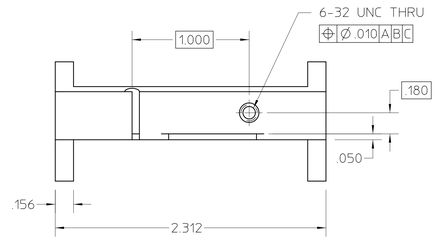

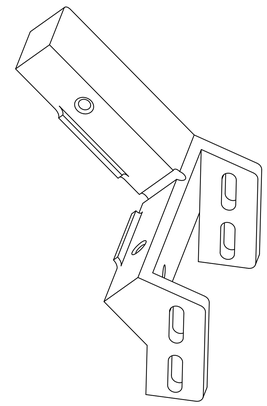

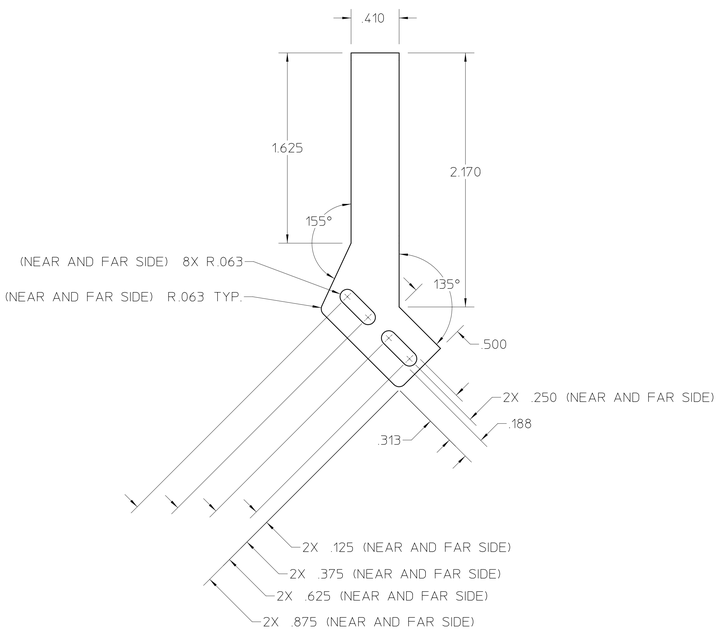

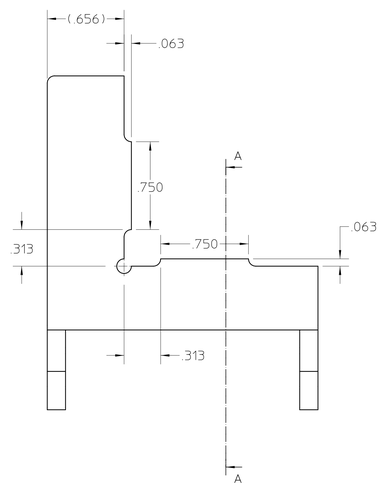

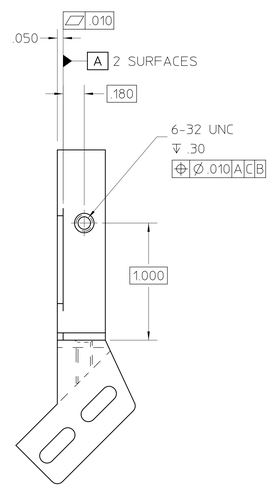

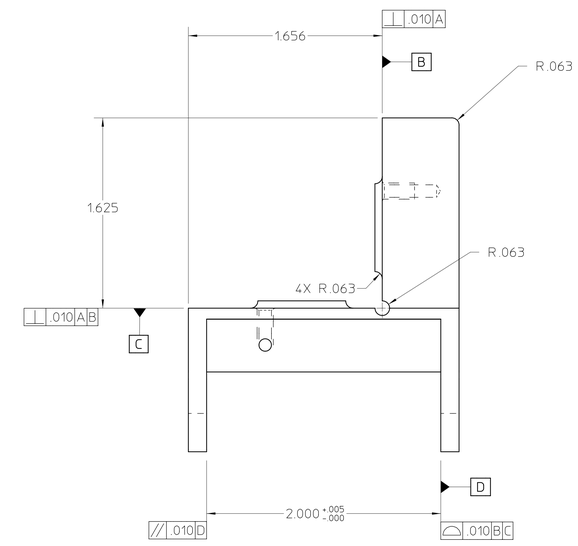

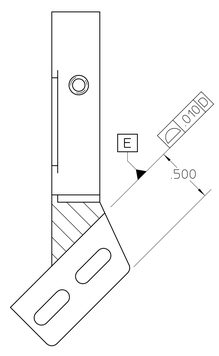

SECTION A-A

NOTES: (UNLESS OTHERWISE SPECIFIED)
1. ALL HIDDEN LINES MAY NOT BE SHOWN.
2. ANODIZE BLACK

REV	AUTHOR	APPROVER	DATE	CHANGE DESCRIPTION
A	ajdemell	ajdemell	09-29-20	INITIAL REVISION

UNLESS OTHERWISE SPECIFIED
TOLERANCES: X± .1 XX± .01 XXX± .005; FRACTIONS: ± -/--; ANGLES: ± 0.5°/INCH; MACH. SURFS.: 125√ OR BETTER
REF: ASME Y14.5M-1994, THREADS ARE CLASS 2
BREAK EDGES .016 MAX. ON MACHINED WORK
REMOVE BURRS, WELD SPLATTER & LOOSE SCALE

MAT 2: . NOTES:
MAT 1: , ALUMINUM 6061-T6 NOTES:

PROJECT NAME: Advanced Light Source
UNIQUE NUMBER: AL-0005-6028
DO NOT SCALE PRINT SCALE: 2 : 1 CATEGORY CODE AL 6193
THIRD ANGLE PROJECTION

ERNEST ORLANDO LAWRENCE
BERKELEY NATIONAL LABORATORY
UNIVERSITY OF CALIFORNIA

LIGHT SOURCE - BEND MAGNET BEAMLINES
BL 12.3.1 END STATION
MIRROR MOUNT HOLDER

SHEET 1 OF 1 SIZE: E DWG NO: 26B000 REV A

AUTO GENERATED PDF
Sep 29 2003 13:51:23 PDT