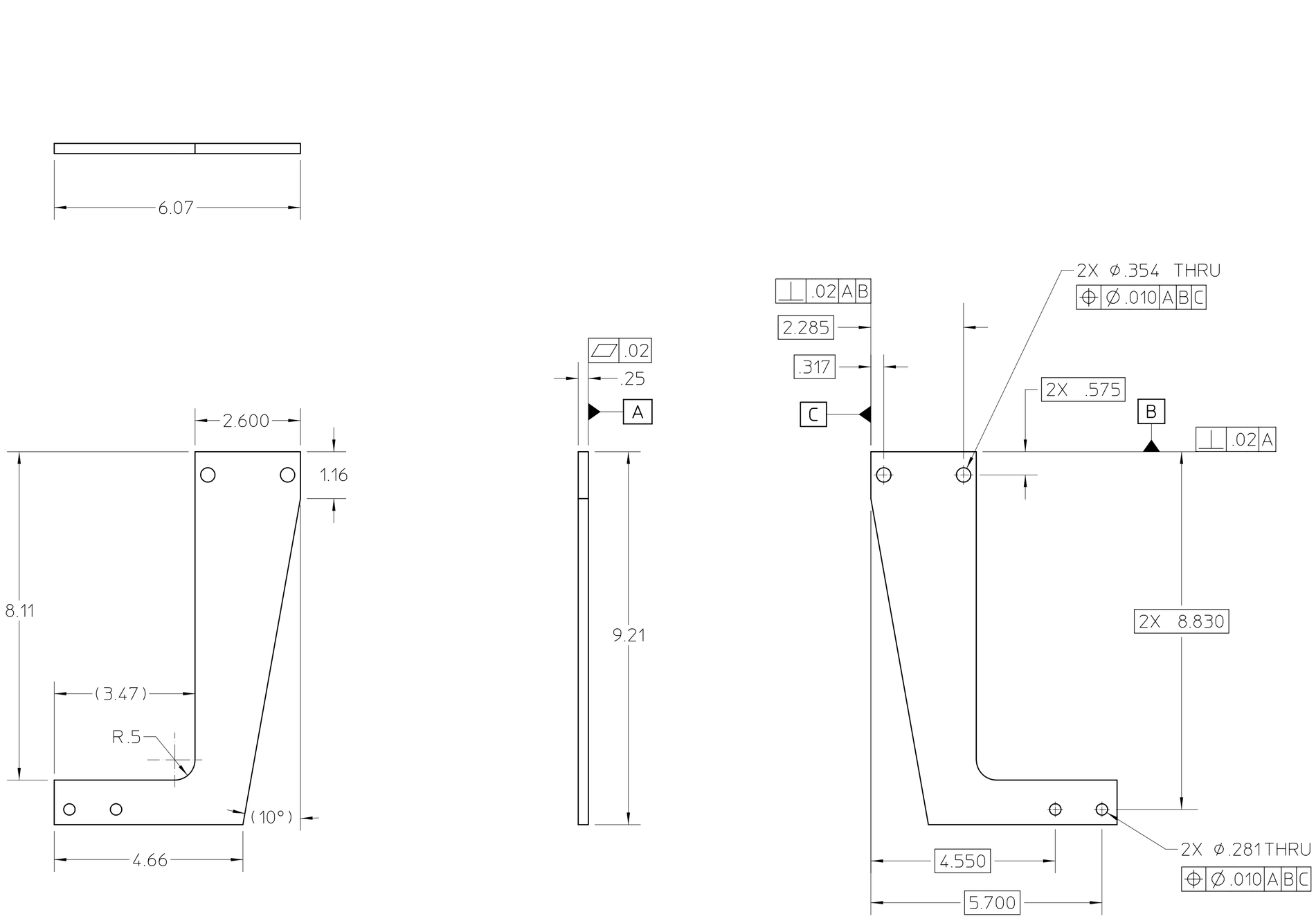

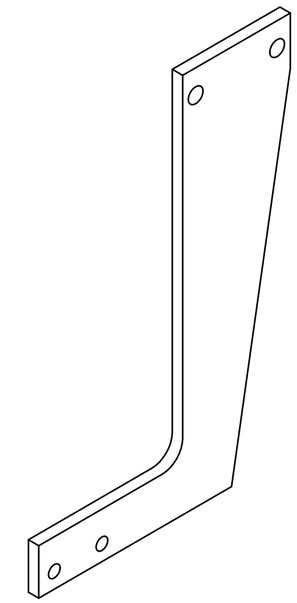

NOTES: (UNLESS OTHERWISE SPECIFIED)

1. ALL HIDDEN LINES MAY NOT BE SHOWN.
2. ANODIZE BLACK

REV	AUTHOR	APPROVER	DATE	CHANGE DESCRIPTION
A	ajdemell	ajdemell	10-03-20	INITIAL REVISION

UNLESS OTHERWISE SPECIFIED

TOLERANCES: .X ± .1 .XX ± .02 .XXX ± .010; FRACTIONS: ± -/--; ANGLES: ± 1.0°/INCH; MACH. SURFS.: 125 OR BETTER

REF: ASME Y14.5M-1994, THREADS ARE CLASS 2

BREAK EDGES .016 MAX. ON MACHINED WORK

REMOVE BURRS, WELD SPLATTER & LOOSE SCALE

MAT 2: , NOTES:

MAT 1: PLATE, ALUMINUM 6061-T6 NOTES:

PROJECT NAME: Advanced Light Source

UNIQUE NUMBER: AL-0005-6188

DO NOT SCALE PRINT SCALE: 1 : 2

CATEGORY CODE: AL 6193

THIRD ANGLE PROJECTION

ERNEST ORLANDO LAWRENCE BERKELEY NATIONAL LABORATORY
UNIVERSITY OF CALIFORNIA

LIGHT SOURCE - BEND MAGNET BEAMLINES

BL 12.3.1 END STATION

VERTICAL CABLE CARRIER, MOVING MOUNT PLATE

SHEET 1 OF 1 | SIZE: C | DWG NO: 26A998 | REV A

AUTO GENERATED PDF
Oct 04 2003 06:01:24 PDT