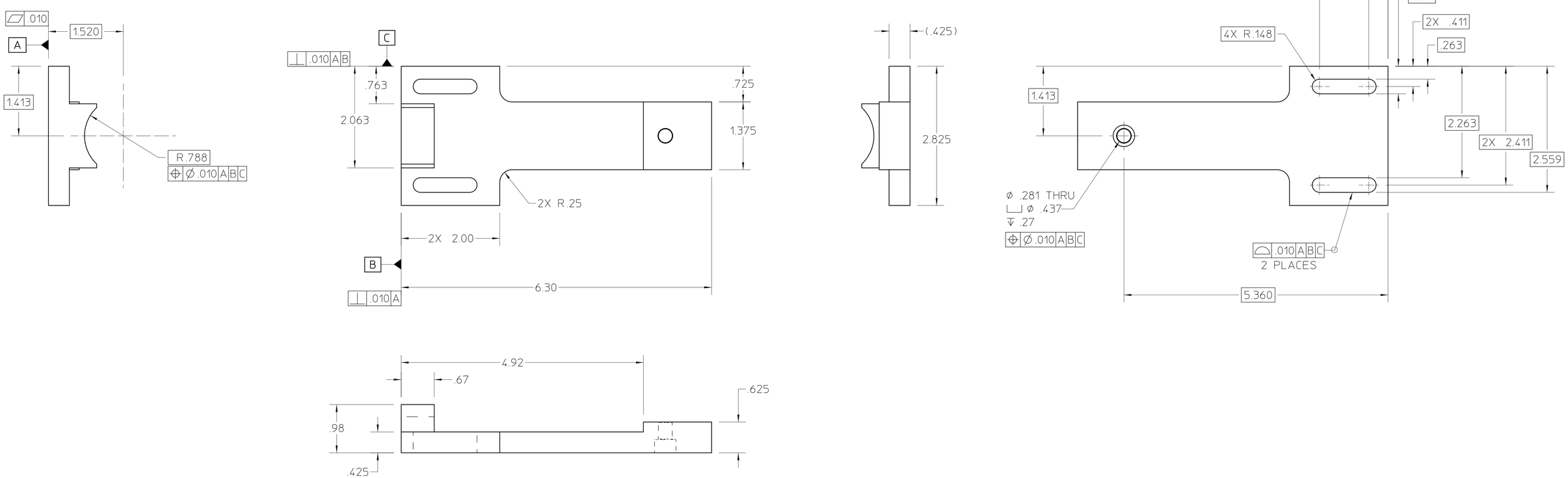

NOTES: (UNLESS OTHERWISE SPECIFIED)
1. ALL HIDDEN LINES MAY NOT BE SHOWN.
2. ANODIZE BLACK

REV	AUTHOR	APPROVER	DATE	CHANGE DESCRIPTION
A	ajdemell	ajdemell	09-29-20	INITIAL REVISION

UNLESS OTHERWISE SPECIFIED
TOLERANCES: .X± .1 .XX± .01 .XXX± .005
FRACTIONS: ± -/--
ANGLES: ± -.-°/INCH
MACH. SURFS.: 125 OR BETTER
REF: ASME Y14.5M-1994, THREADS ARE CLASS 2
BREAK EDGES .016 MAX. ON MACHINED WORK
REMOVE BURRS, WELD SPLATTER & LOOSE SCALE

MAT 2: . NOTES:
MAT 1: . ALUMINUM 6061-T6 NOTES:

PROJECT NAME: Advanced Light Source
UNIQUE NUMBER: AL-0005-6018
DO NOT SCALE PRINT
CATEGORY CODE: AL 6193
SCALE: 1 : 1
THIRD ANGLE PROJECTION

ERNEST ORLANDO LAWRENCE
BERKELEY NATIONAL LABORATORY
UNIVERSITY OF CALIFORNIA
BERKELEY LAB

LIGHT SOURCE - BEND MAGNET BEAMLINES
BL 12.3.1 END STATION
CAMERA TO HE BOX MOUNT PLATE

SHEET 1 OF 1 | SIZE: D | DWG NO: 26A991 | REV A

AUTO GENERATED PDF
Sep 29 2003 14:01:23 PDT