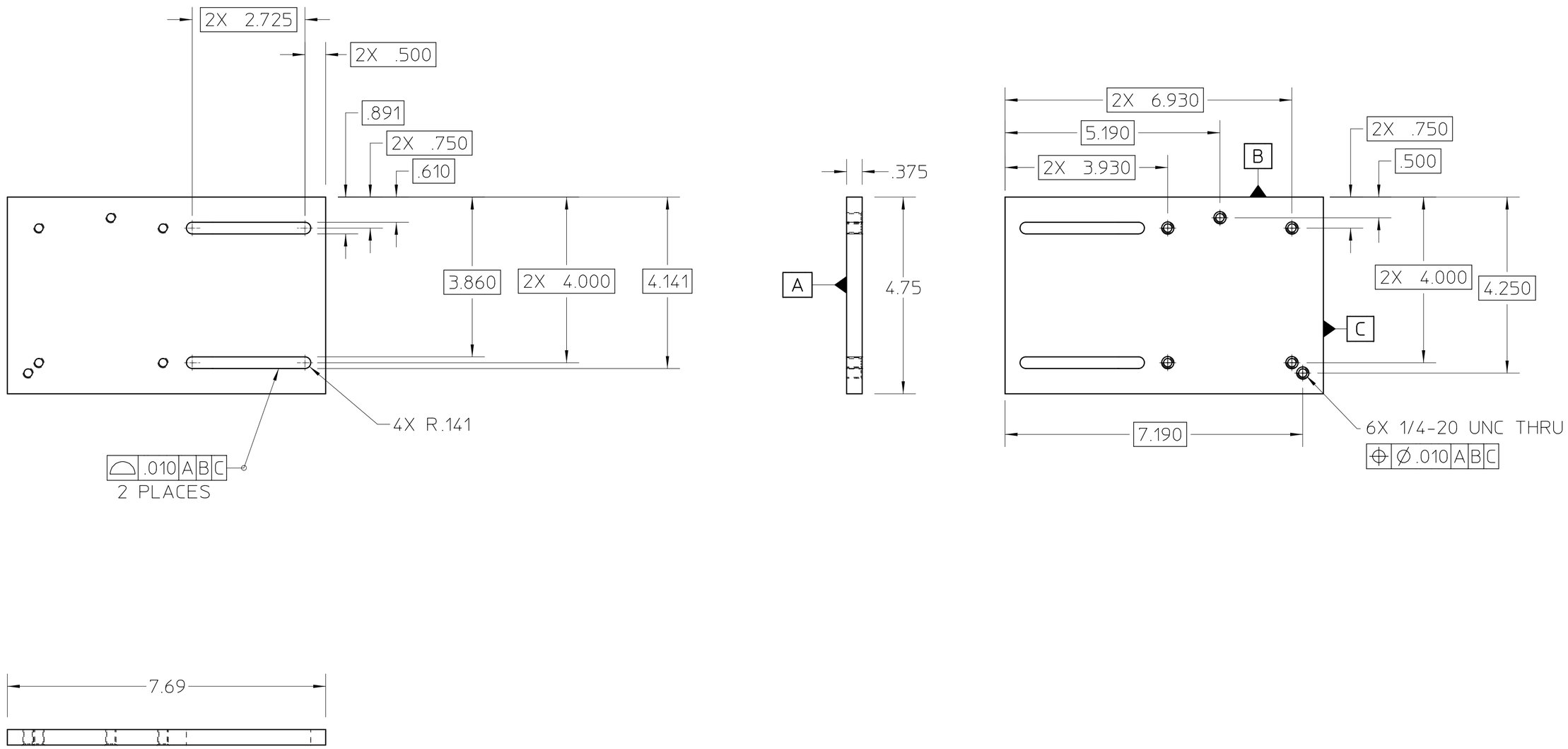

NOTES: (UNLESS OTHERWISE SPECIFIED)

1. ALL HIDDEN LINES MAY NOT BE SHOWN.
2. DEGREASE

REV	AUTHOR	APPROVER	DATE	CHANGE DESCRIPTION
A	ajdemell	ajdemell	09-18-20	INITIAL REVISION

UNLESS OTHERWISE SPECIFIED

TOLERANCES: .X± - .XX±.02 .XXX±.010; FRACTIONS: ± -/--; ANGLES: ± -.-°/INCH; MACH. SURFS.: 125 OR BETTER

REF: ASME Y14.5M-1994, THREADS ARE CLASS 2

BREAK EDGES .016 MAX. ON MACHINED WORK

REMOVE BURRS, WELD SPLATTER & LOOSE SCALE

MAT 2: , NOTES:

MAT 1: PLATE, CARBON STEEL NOTES:

PROJECT NAME: Advanced Light Source

UNIQUE NUMBER: AL-0005-5630

DO NOT SCALE PRINT SCALE: 1:2

CATEGORY CODE: AL6193

THIRD ANGLE PROJECTION

ERNEST ORLANDO LAWRENCE BERKELEY NATIONAL LABORATORY
UNIVERSITY OF CALIFORNIA

LIGHT SOURCE - BEND MAGNET BEAMLINES

BL 12.3.1 END STATION

FRONT HARD STOP SUB-BASE

SHEET 1 OF 1 SIZE: C DWG NO: 26A980 REV A

AUTO GENERATED PDF
Sep 18 2003 12:51:21 PDT