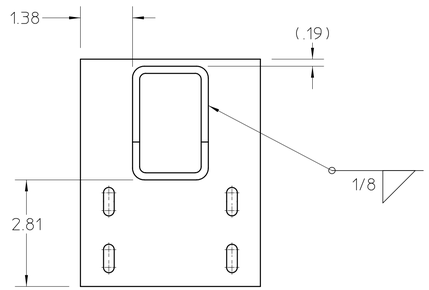

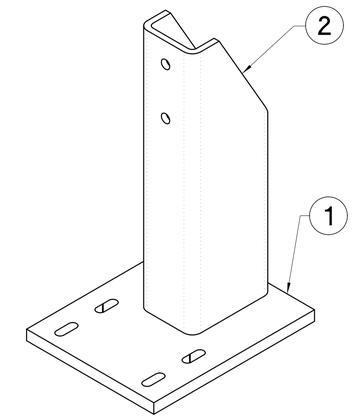

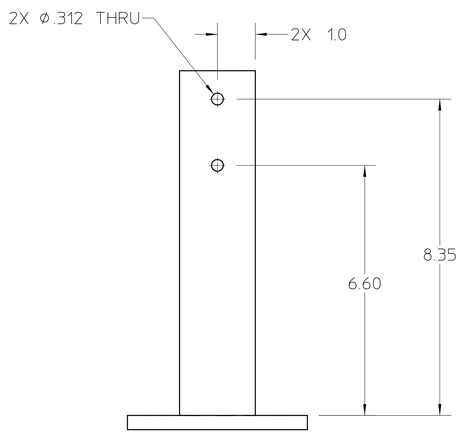

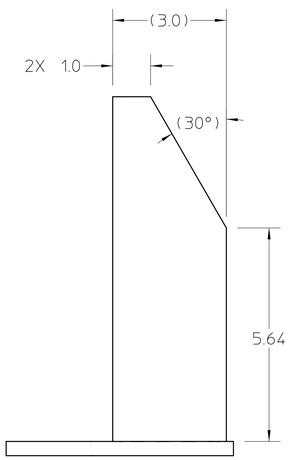

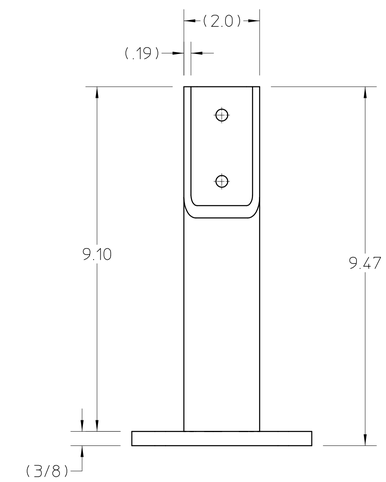

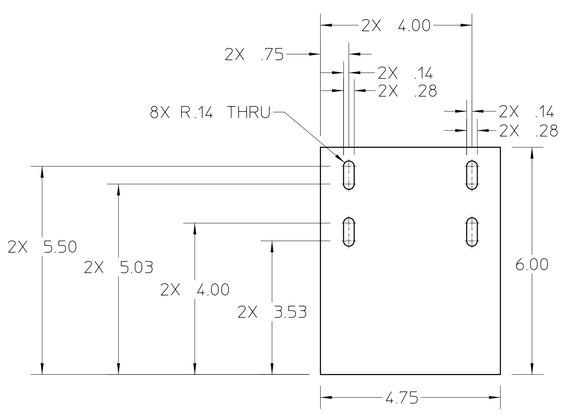

NOTES: (UNLESS OTHERWISE SPECIFIED)

1. SAW CUT PERMISSIBLE FOR ITEMS 1 AND 2 EXCEPT FOR MACHINED HOLES.

2. SURFACE TREATMENT:
   A) ALL SURFACES TO BE FREE OF BURRS, CHIPS, SCALE, SLAG, RUST, DIRT, OIL AND GREASE.

   B) ALL SURFACES (UNLESS OTHERWISE INDICATED) SHALL BE PAINTED WITH RUSTOLEUM LABOR SAVER HIGH PERFORMANCE POLYURETHANE 9800 DTM URETHANE MASTIC SYSTEM #9879 GLOSS BLACK OR EQUIVALENT.

REV	AUTHOR	APPROVER	DATE	CHANGE DESCRIPTION
A	ajdemell	ajdemell	07-24-20	INITIAL REVISION

REQD	ITEM	PART NO.	DESCRIPTION
1	2		2" x 3" x 3/16" WALL THK., RECTANGULAR TUBING, STEEL
1	1		3/8" THICK PLATE, STEEL

UNLESS OTHERWISE SPECIFIED
TOLERANCES: .X± .1 .XX± .02 .XXX± .010; FRACTIONS: ± 1/8; ANGLES: ± 1/2°/INCH; MACH. SURFS.: 125✓ OR BETTER
REF: ASME Y14.5M-1994, THREADS ARE CLASS 2
BREAK EDGES .016 MAX. ON MACHINED WORK
REMOVE BURRS, WELD SPLATTER & LOOSE SCALE

PROJECT NAME: Advanced Light Source
UNIQUE NUMBER: AL-0003-9917
DO NOT SCALE PRINT
CATEGORY CODE: AL 6193
SCALE: 1 : 2
THIRD ANGLE PROJECTION

ERNEST ORLANDO LAWRENCE BERKELEY NATIONAL LABORATORY
UNIVERSITY OF CALIFORNIA
BERKELEY LAB

LIGHT SOURCE - BEND MAGNET BEAMLINES
BL 12.3.1 END STATION
HARD STOP, FRONT

SHEET 1 OF 1 | SIZE: D | DWG NO: 26A893 | REV A

AUTO GENERATED PDF
Jul 24 2003 15:01:20 PDT