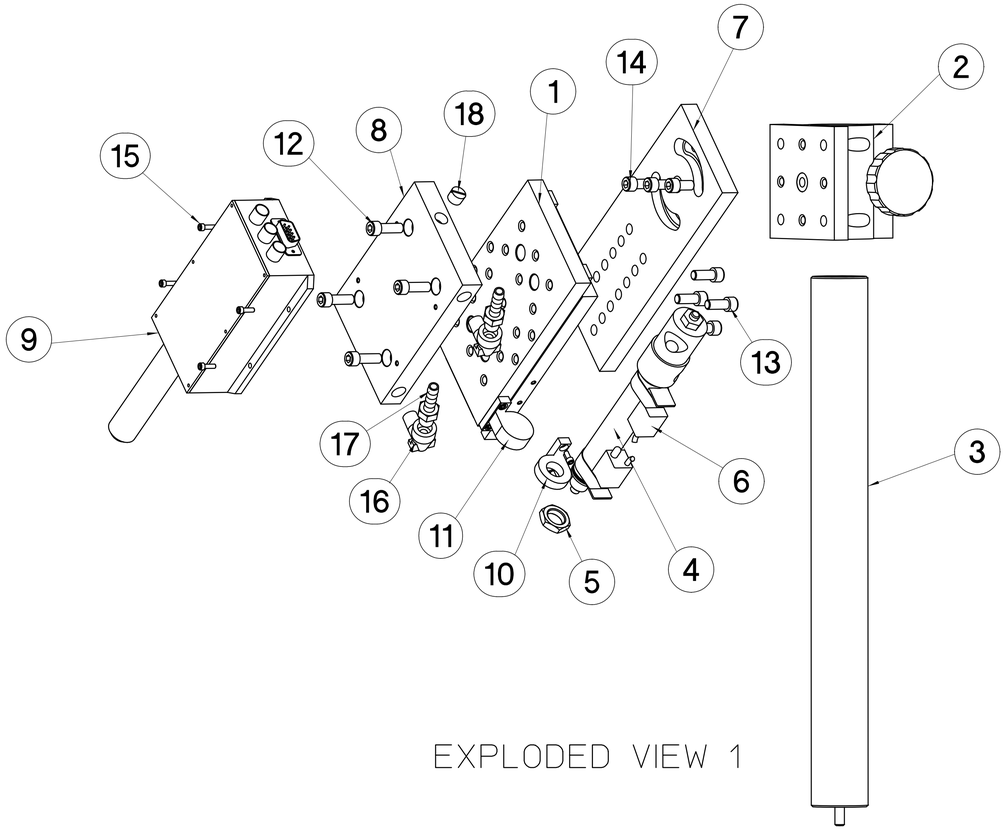

EXPLODED VIEW 1

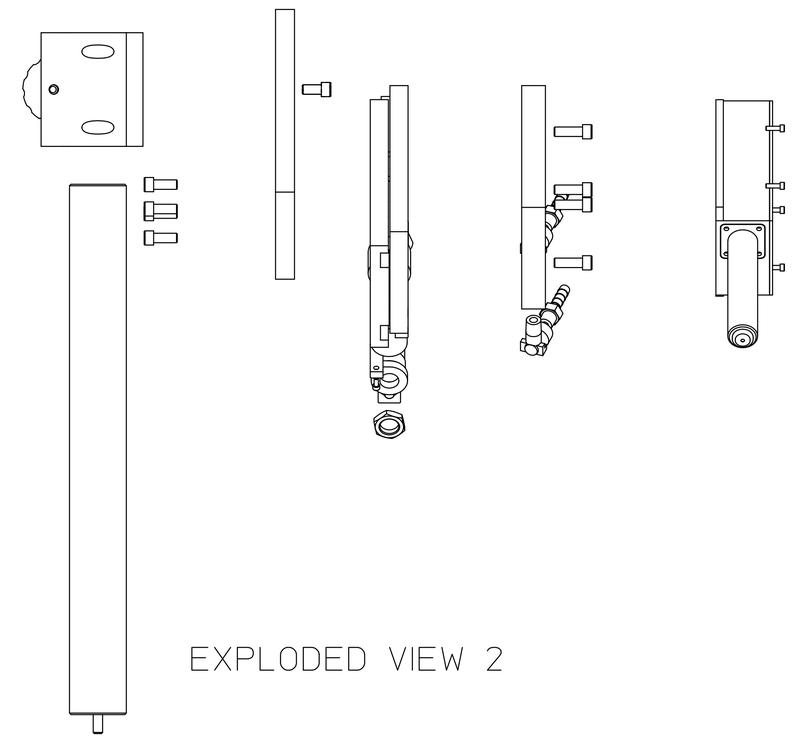

EXPLODED VIEW 2

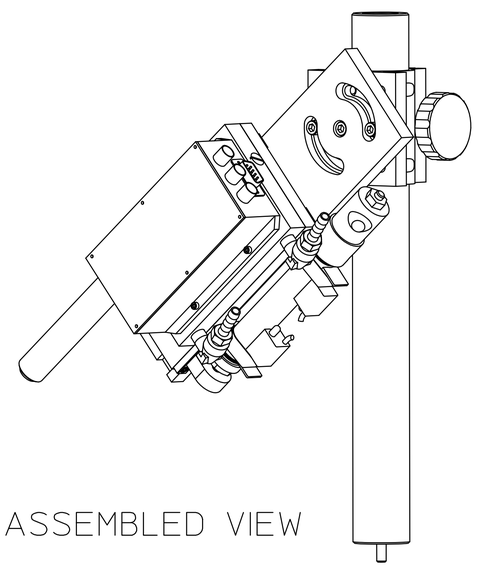

ASSEMBLED VIEW

REQD	ITEM	PART NO.	DESCRIPTION	
1	18	--	HEATSINK WATER FITTING, PLUG	
2	17	--	HEATSINK WATER FITTING, BARBED	
2	16	--	HEATSINK WATER FITTING, 90°	
4	15	--	4-40 UNC x 3/8 LG. SHCS	
3	14	--	1/4-20 UNC x 1/2 LG. SHCS	
4	13	--	1/4-20 UNC x 5/8 LG. SHCS	
4	12	--	1/4-20 UNC x 3/4 LG. SHCS	
1	11	--	ACTUATOR STOP	NEWPORT
1	10	--	ACTUATOR MOUNT, MODIFIED	NEWPORT
1	9	AXAS-SDD5	AXAS X-RAY DETECTOR	KETEK
1	8	26A961	DETECTOR HEAT SINK	
1	7	26A962	ROTARY ADAPTOR PLATE	
2	6	MRS-.087-PBL-04	AIR CYLINDER MAGNETIC REED SWITCH	BIMBA
1	5	--	AIR CYLINDER MOUNT NUT, MODIFIED	BIMBA
1	4	M-042-LS1G	AIR CYLINDER	BIMBA
1	3	MODEL 40	MOUNT ROD	NEWPORT
1	2	MODEL 340-RC	ROD CLAMP	NEWPORT
1	1	MODEL 436	TRANSLATION STAGE	NEWPORT

REV	AUTHOR	APPROVER	DATE	CHANGE DESCRIPTION
A	ajdemell	ajdemell	01-20-20	INITIAL REVISION

UNLESS OTHERWISE SPECIFIED
TOLERANCES: X± .- .XX± .-- .XXX± .---
FRACTIONS: ± -/--
ANGLES: ± -.-°/INCH
MACH. SURFS.: 125√ OR BETTER
REF: ASME Y14.5M-1994, THREADS ARE CLASS 2
BREAK EDGES .016 MAX. ON MACHINED WORK
REMOVE BURRS, WELD SPLATTER & LOOSE SCALE

PROJECT NAME: Advanced Light Source
UNIQUE NUMBER: AL-0001-4434
DO NOT SCALE PRINT
SCALE: 1:2
CATEGORY CODE: AL6193
THIRD ANGLE PROJECTION

ERNEST ORLANDO LAWRENCE
BERKELEY NATIONAL LABORATORY
UNIVERSITY OF CALIFORNIA

LIGHT SOURCE - BEND MAGNET BEAMLINES
BL 12.3.1 END STATION
SCINTILLATOR MOUNTING ASSY

SHEET 1 OF 1 | SIZE: D | DWG NO: 26A885 | REV A

AUTO GENERATED PDF
Jan 20 2004 14:01:45 PST