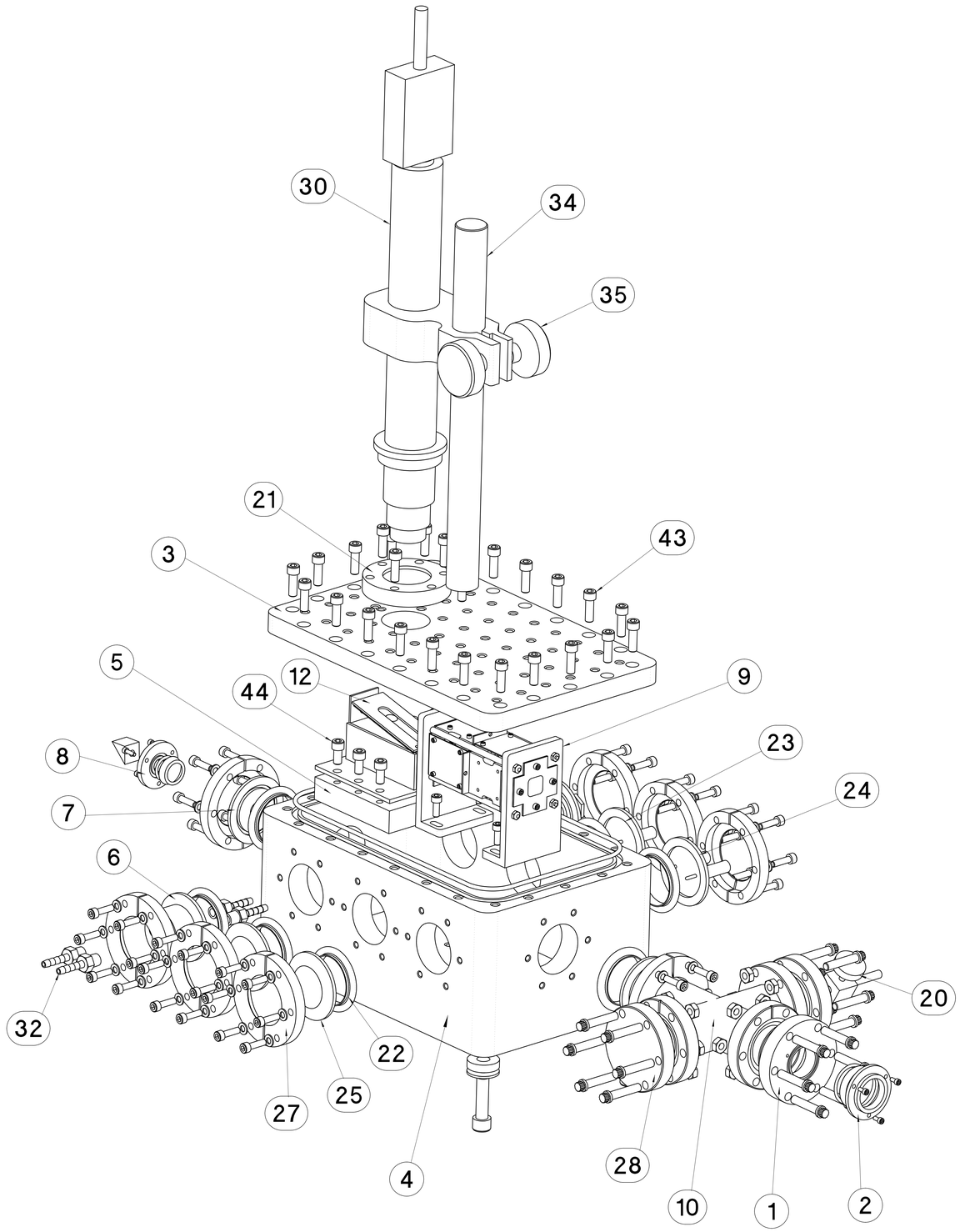

EXPLODED VIEW
SCALE 1:1.5

ITEM	REQ'D	PART NUMBER	DESCRIPTION	
1	1	26A296	BE WINDOW FLANGE (1.00)	
2	1	26A297	BE WINDOW GLAND (1.00)	
3	1	26A321	LID (HE BOX)	
4	1	26A327	VACUUM CHAMBER (HE)	
5	1	26A415	HEAT SINK	
6	1	26A612	PS COOLING FLANGE	
7	1	26A747	NW-40, MODIFIED FLANGE	
8	1	26A758	BE WINDOW GLAND .500 MODIFIED	
9	1	26A784	SAX SPLIT ION CHAMBER	
10	1	26A785	2.75 CFF - NW40, 4 WAY CROSS ASSY	
11	1	--		
12	1	LS055F	LASER SHUTTER FOR X_RAYS, MODIFIED	NM LASER PRODUCTS
NOT SHOWN > 13	1	CX2250	LASER SHUTTER CONTROLLER	
14	2	PARKER #2-016 OR EQUIV.	O-RING, BUNA N	
15	2	PARKER #2-023 OR EQUIV.	O-RING, BUNA N	
16	1	--	GASKET O-RING, Ø1/8" MATL.	
17	1	EDSCI K45-593 OR EQUIV.	15MM PRISM	
18	1	--	Be_FOIL (0.5")	
19	1	--	Be_FOIL (1.00")	
20	1	MDC #420006 OR EQUIV.	2.75 CFF UP TO AIR VALVE	
21	1	MDC #450002 OR EQUIV.	2.75" CF VIEWPORT FLANGE	
22	8	MDC #710015 OR EQUIV.	NW-40 CENTERING RING GASKET ASSY, VITON O-RING	
23	1	ISI #9213001 OR EQUIV.	NW-40 WITH 1 BNC 2 PIN CONN FEEDTHROUGH	
24	1	ISI #9213002 OR EQUIV.	NW-40 WITH 2 BNC 2 PIN CONN FEEDTHROUGH	
25	2	MDC #712002 OR EQUIV.	NW40 BLANK FLANGE	
26	1	MDC #712002 OR EQUIV.	NW40 BLANK FLANGE, MODIFIED FOR 3 PIN CONNECTOR	
27	8	MDC #716002 OR EQUIV.	CLAMP, BULKHEAD	
28	1	MDC #110008 OR EQUIV.	2.75 CFF BLANK	
29	3	MDC #191004 OR EQUIV.	GASKET, COPPER	
30	1	VZM 450	VIDEO ZOOM LENS	EDMUND INDUSTRIAL OPTICS
31	1	DT07H-8-3PN	3 PIN ELECTRIC CONNECTOR	DETORONICS
32	6	--	BRASS BARBED FITTING	
33	2	--	90° BRASS ELBOW	
34	1	--	CAMERA MOUNT POLE	
35	1	--	CAMERA MOUNT CLAMP	
36	--	--		
37	1	--	3/8-16 UNC x 1 LG HEX HD SCREW	
38	3	--	3/8 FLAT WASHER	
39	3	--	3/8 SPACER .25 THK.	
40	3	--	3/8-16 UNC x 1.375 LG. SOCKET HD CAP SCREW	
41	18	--	1/4-28 UNF x 1.25 LG. 12 POINT CAP SCREW	
42	18	--	NUT, HEX, SSTL, 1/4-28 UNF	
43	25	--	1/4-20 x 3/4 LG. SOCKET HD CAP SCREW	
44	6	--	1/4-20 x 1/2 LG. SOCKET HD CAP SCREW	
45	4	--	10-32 x 1/2 LG. SOCKET HD CAP SCREW	
46	3	--	4-40 x 1/4 LG. SOCKET HD CAP SCREW	
47	3	--	4-40 x 3/8 LG. SOCKET HD CAP SCREW	
48	--	--		
49	--	--		
50	--	--		

REV	AUTHOR	APPROVER	DATE	CHANGE DESCRIPTION
A	ajdemell	kelez	08-19-20	INITIAL REVISION

UNLESS OTHERWISE SPECIFIED
TOLERANCES: .X± .- .XX± .-- .XXX± .---
FRACTIONS: ± -/--
ANGLES: ± -.-°/INCH
MACH. SURFS.: 125 OR BETTER
REF ASME Y14.5M-1994. THREADS ARE CLASS 2
BREAK EDGES .016 MAX. ON MACHINED WORK
REMOVE BURRS, WELD SPLATTER & LOOSE SCALE

PROJECT NAME: Advanced Light Source
UNIQUE NUMBER: AL-0001-7389
DO NOT SCALE PRINT
SCALE: 1 : 10
CATEGORY CODE: AL 6193
THIRD ANGLE PROJECTION

ERNEST ORLANDO LAWRENCE
BERKELEY NATIONAL LABORATORY
UNIVERSITY OF CALIFORNIA

LIGHT SOURCE - BEND MAGNET BEAMLINES
BL 12.3.1 END STATION
HELIUM BOX ASSY

SHEET 1 OF 2 | SIZE: E | DWG NO: 26A884 | REV A

AUTO GENERATED PDF
Aug 19 2003 11:22:00 PDT

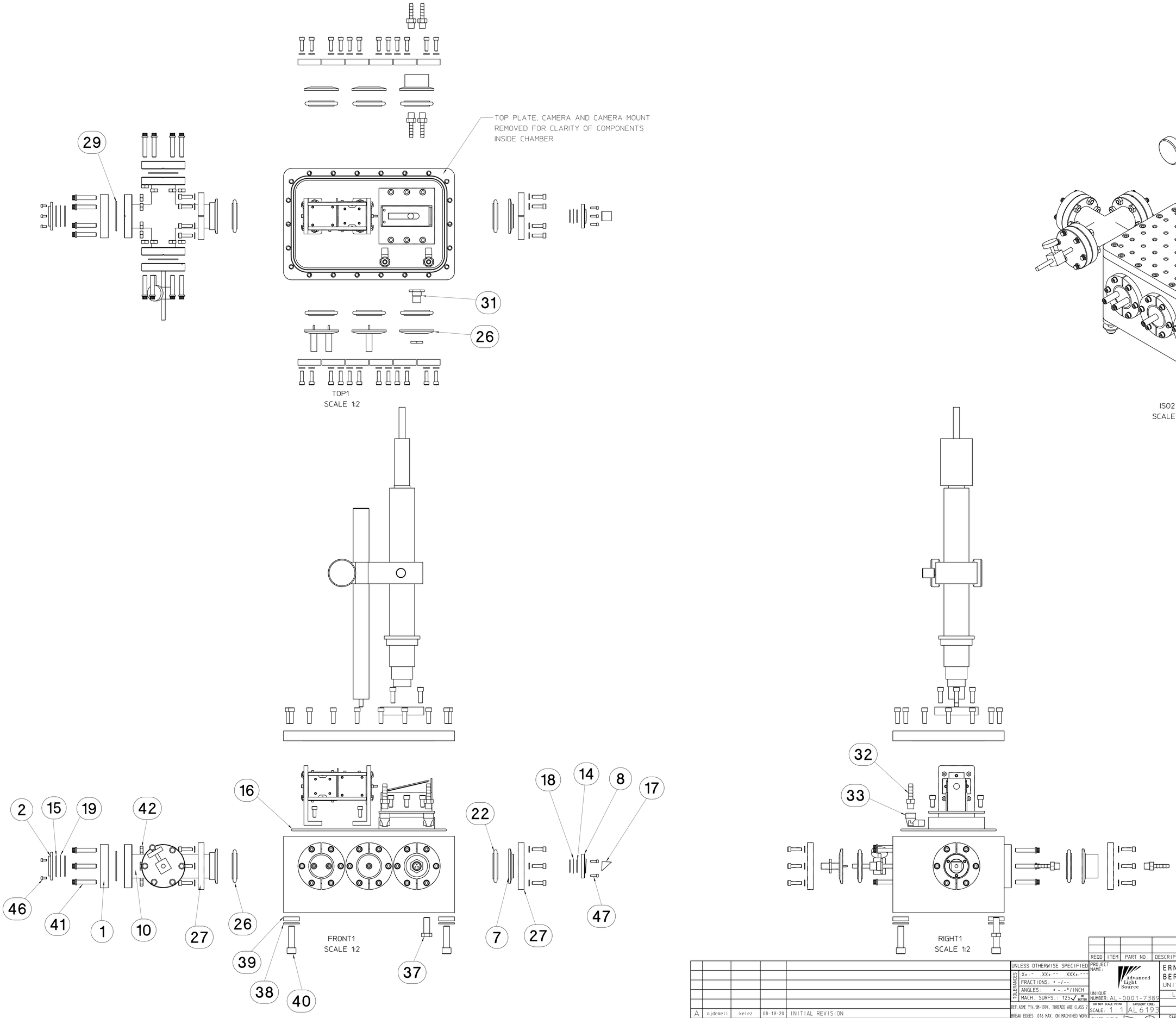

REV	AUTHOR	APPROVER	DATE	CHANGE DESCRIPTION
A	ajdemell	kelez	08-19-20	INITIAL REVISION

REQD	ITEM	PART NO.	DESCRIPTION

UNLESS OTHERWISE SPECIFIED
TOLERANCES: X± .- .XX± .-- .XXX± .---
FRACTIONS: ± -/--
ANGLES: ± -.-°/INCH
MACH. SURFS.: 125 ✓ OR BETTER
REF: ASME Y14.5M-1994, THREADS ARE CLASS 2
BREAK EDGES .016 MAX. ON MACHINED WORK
REMOVE BURRS, WELD SPLATTER & LOOSE SCALE

PROJECT NAME: Advanced Light Source
UNIQUE NUMBER: AL-0001-7389
DO NOT SCALE PRINT
SCALE: 1 : 1
CATEGORY CODE: AL 6193
THIRD ANGLE PROJECTION

ERNEST ORLANDO LAWRENCE
BERKELEY NATIONAL LABORATORY
UNIVERSITY OF CALIFORNIA
LIGHT SOURCE - BEND MAGNET BEAMLINES
BL 12.3.1 END STATION
HELIUM BOX ASSY

SHEET 2 OF 2 | SIZE: E | DWG NO: 26A884 | REV A

AUTO GENERATED PDF
Aug 19 2003 11:22:16 PDT