Dwg. No.	Size	Rev
26A8471		A

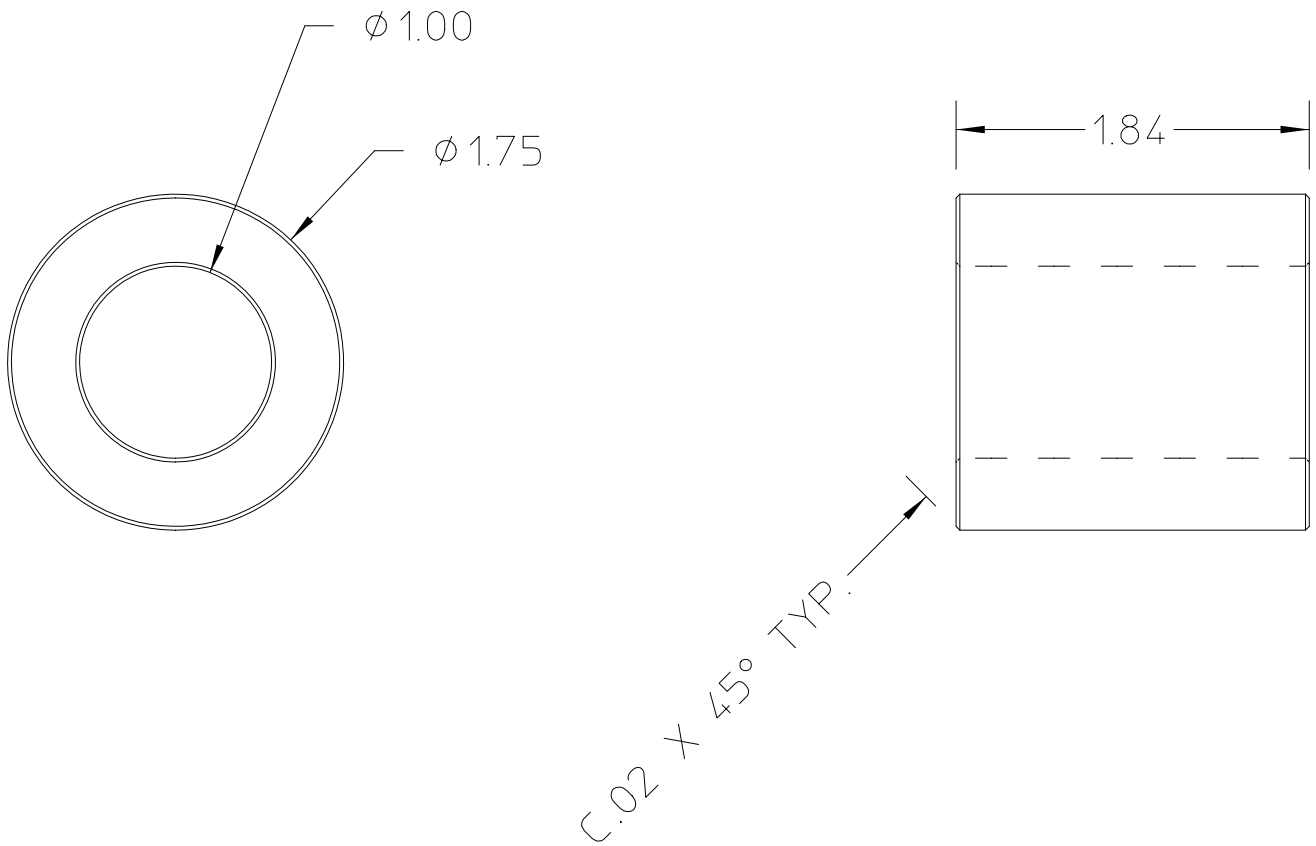

Unless Otherwise Specified	Angles ± °	MAT 2: ,	NOTES:
.X ± .1 .XX ± .02 .XXX ± .010		MAT 1: , STAINLESS STEEL	NOTES:

Break Edges .016 Max on Machined Work
Remove Burrs Weld Splatter and Loose Scale
References: ANSI Y 14.5 & B46.1

REV	CHANGES	DWG BY	DATE	CHK BY	DATE	APP BY	DATE

Account Number		Finish	√ 125
Date Issued	-	Date Reqd	-
Number Required	-	Deliver To	-
Surface Treatment	DEGREASE	Identific Method	
Drawn By	ajdemell	Date	06-27-2003
Check By	ajdemell	Date	06-30-2003
App. By	ajdemell	Date	06-30-2003

LAWRENCE BERKELEY LABORATORY

University of California - Berkeley

LIGHT SOURCE - BEND MAGNET BEAMLINES

BL 12.3.1 END STATION

KINEMATIC MOUNT STUD SLEEVE

Shown on Dwg No.	Category Code	AL 6193	Drawing Scale	1:1	DO NOT SCALE PRINTS
Patent Clear	Drawing Type	DETAIL	Dwg. No. 26A8471	Size	Rev A
Micro-Filmed	Design Account	-			

SHEET 1 OF 1

AUTO GENERATED PDF – Jun 30 2003 14:41:53 PDT