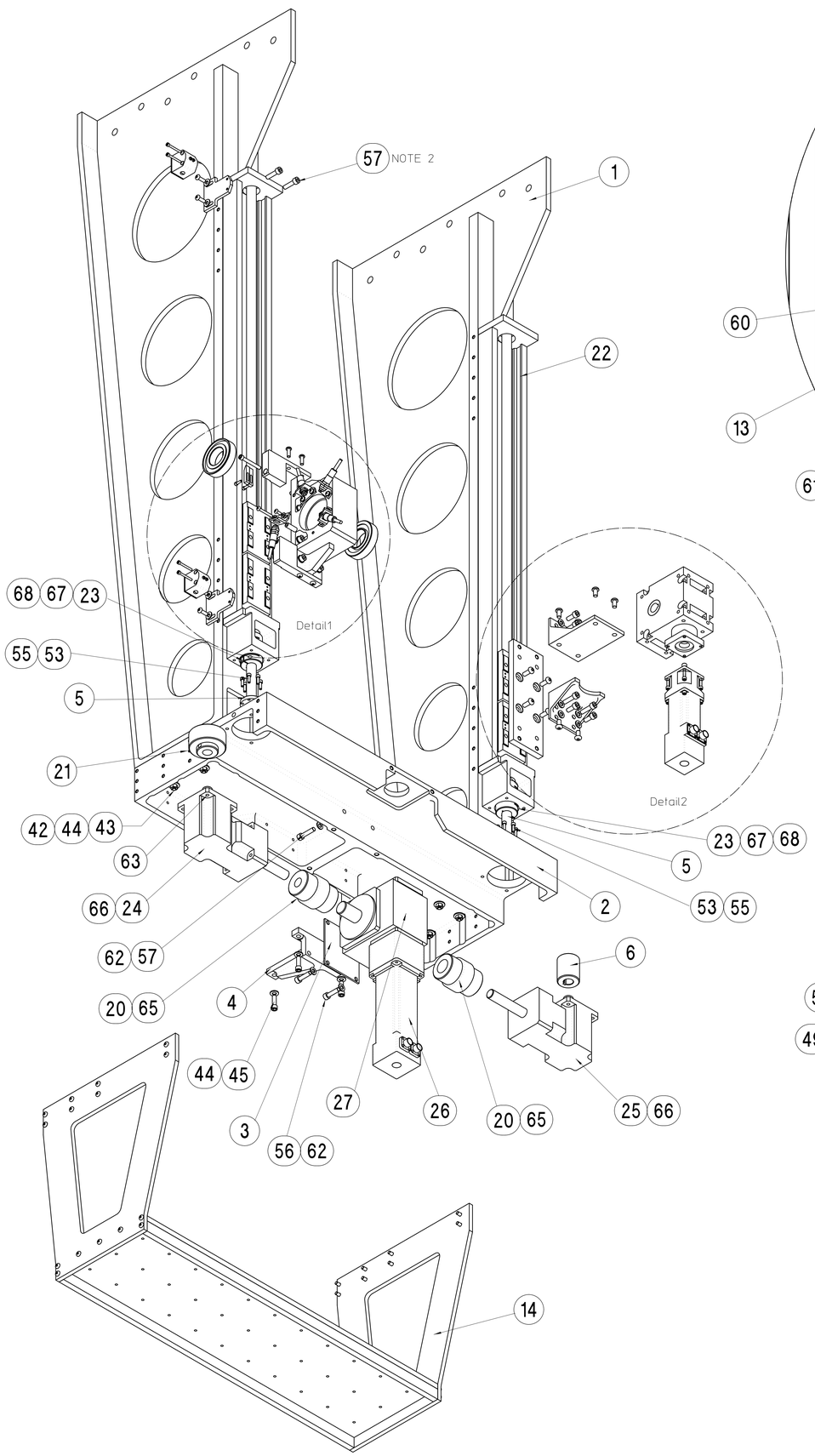

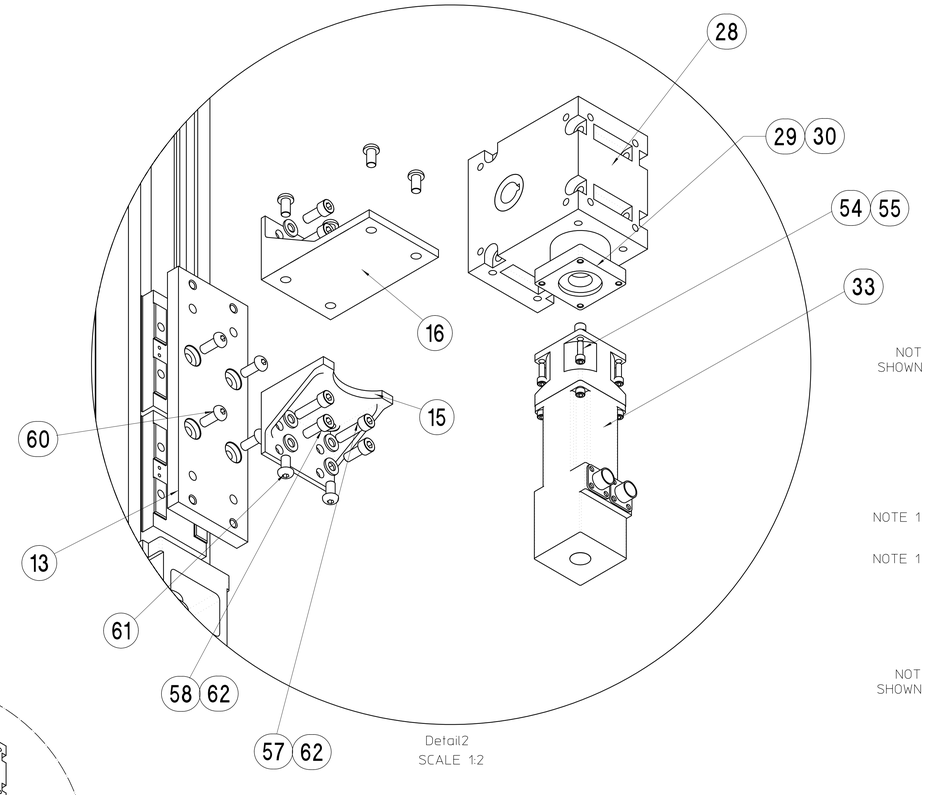

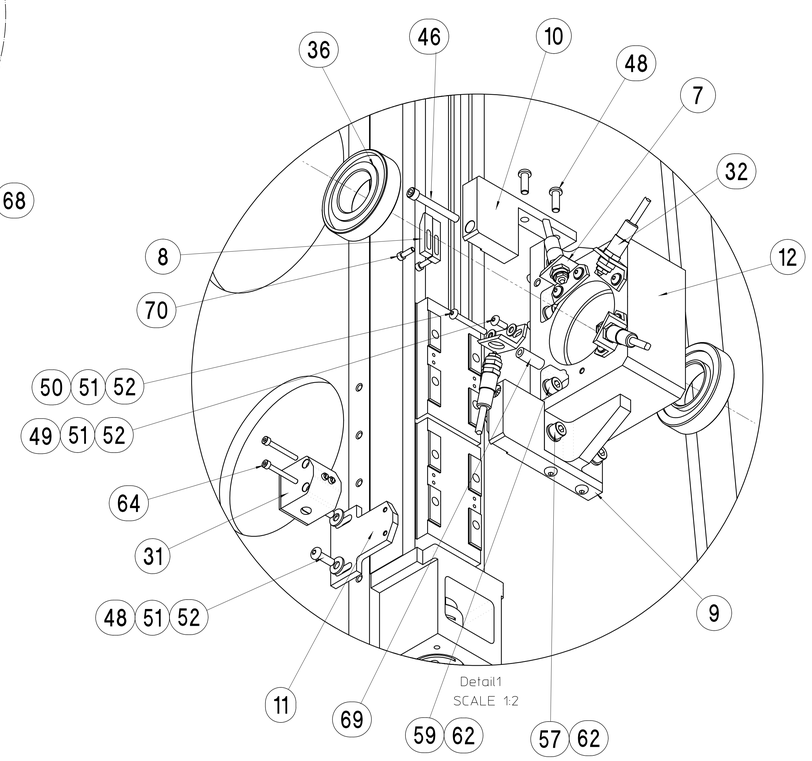

	ITEM	REQ'D	PART NUMBER	DESCRIPTION
	1	2	26A596	GANTRY ASSY - GANTRY SIDE FRAME
	2	1	26A602	GANTRY ASSY - BOTTOM PLATE
	3	1	25K066	WHISPER DRIVE SPACER PLATE
	4	1	25K077	MOTOR SUPPORT BRACKET
	5	2	26A668	EXTENSION SHAFT
	6	1	25K079	COUPLING
	7	4	26A731	BRACKET, EUCHNER HOLE TYPE LIMIT SWITCH
	8	4	26A733	EUCHNER LIMIT SWITCH TRIP
	9	1	26A734	LOWER TRIP DOG MOUNT, EUCHNER SWITCH
	10	1	26A735	UPPER TRIP DOG MOUNT, EUCHNER SWITCH
	11	2	26A737	VERTICAL LIMIT SWITCH MOUNT PLATE
	12	1	26A738	ROTARY AXIS PILLOW BLOCK
	13	1	26A773	GUDEL REDUCER MOUNT PLATE
	14	1	26A712	GANTRY SHELF ASSEMBLY
	15	1	26A793	GUDEL MOUNTING GUSSET, BOTTOM
	16	1	26A795	GUDEL MOUNTING GUSSET, TOP
	17	-		
NOT SHOWN	18	1	70GB-CABLE-25	COMPUMOTOR CABLE SET. 1 PWR +1 FEEDBACK CABLE25' LG, MS CONNECTOR.
NOT SHOWN	19	1	GV-U12E	COMPUMOTOR, GEMINI SERIES, DIGITAL SERVO DRIVE.
	20	2	AKD60-20H7-30H7	METAL BELLOWS COUPLING WITH 6mm & 8mm KEYWAYS. RIMTEC
	21	1	HDI-25	HARMONIC DRIVE PHASE ADJUSTER. Ø20mm BORE, 6mm KEYWAY
	22	2	BG5520B-1080P/AO	HIGH ACCURACY SINGLE AXIS ACTUATOR BG TYPE. NIPPON BEARING
	23	2	AKD18-12H7-20H7	METAL BELLOWS COUPLING, WITH 4mm & 6mm KEYWAYS. RIMTEC
	24	1	DTRS90-001	THOMSON MICRON RT ANGLE DRIVE, DURA TRUE 90, OPPOSITE ROTATION TO ITEM 14.
	25	1	DTRS90-001	THOMSON MICRON RT ANGLE DRIVE, DURA TRUE 90.
NOTE 1	26	1	N0343GE-NMSB	COMPUMOTOR, NEOMETRIC SERIES, SERVO MOTOR, NEMA 34, 1000ppr, w/BRAKE
NOTE 1	27	1	50.8MMCD	SIZE 51 TEXTRON WHISPER DRIVE, ZERO BACKLASH, 30:1 RATIO, CONE DRIVE
NOTE 1	28	1	454-518-47	GUDEL STANDARD WORM GEAR UNIT
NOTE 1	29	1	6-6373XX	GUDEL NON-STANDARD GEARBOX FLANGE
	30	1	40452X-9.525	GUDEL WORM GEAR COUPLING
	31	2	SN-02-R-08-552M	EUCHNER - MULTIPLE LIMIT SWITCH
	32	4	EGT 1/4-R-2000	EUCHNER - SINGLE HOLE LIMIT SWITCH
	33	1	CM232AE-113085	MODIFIED SM232AE-KGSG05 COMPUMOTOR SERVO MOTOR w/BRAKE
NOT SHOWN	34	1	GV-L3E	GEMINI SERIES, DIGITAL SERVO DRIVE
NOT SHOWN	35	1	23GS CABLE-50	GEMINI CABLE SET
	36	2	7208-BECBY	ANGULAR CONTACT BALL BEARING. SKF
	37	-		
	38	14	McMASTER #91257A727 OR EQUIV.	1/2- 13 UNC x 3.75 LG HEX HD SCREW
	39	14	McMASTER #95462A033 OR EQUIV.	1/2-13 UNC HEX NUT. GRADE 5, ZINC PLATED STEEL
	40	14	McMASTER #98019A509 OR EQUIV.	1/2" FLAT WASHER
	41	14	McMASTER #92146A033 OR EQUIV.	1/2" LOCK WASHER
	42	12	McMASTER #95462A510 OR EQUIV.	5/16-24 UNF HEX NUT. GRADE 5, ZINC PLATED STEEL
	43	12	McMASTER #91247A112 OR EQUIV.	5/16- 24 UNF x 1.75 LG HEX HD SCREW
	44	27	McMASTER #98019A385 OR EQUIV.	5/16 FLAT WASHER. .343 ID x .687 OD, STAINLESS STEEL
	45	3	McMASTER #91251A582 OR EQUIV.	5/16-18 x 7/8 LG. SOCKET HD CAP SCREW, BLACK ALLOY STEEL
	46	2	McMASTER #91251A550 OR EQUIV.	1/4-20 x 2 LG. SOCKET HD CAP SCREW, BLACK ALLOY STEEL.
	47	10	McMASTER #91251A540 OR EQUIV.	1/4-20 x 3/4 LG. SOCKET HD CAP SCREW, BLACK ALLOY STEEL.
	48	38	McMASTER #91255A540 OR EQUIV.	1/4-20 x 3/4 LG. BUTTON HD CAP SCREW, BLACK ALLOY STEEL.
	49	6	McMASTER #91255A537 OR EQUIV.	1/4-20 x 1/2 LG. BUTTON HD CAP SCREW, BLACK ALLOY STEEL.
	50	2	McMASTER #91255A546 OR EQUIV.	1/4-20 x 1.5 LG. BUTTON HD CAP SCREW, BLACK ALLOY STEEL.
	51	12	McMASTER #98019A355 OR EQUIV.	1/4 FLAT WASHER .281 ID x .625 OD x .080 THK. SS
	52	12	McMASTER #92146A029 OR EQUIV.	1/4" LOCK WASHER
	53	12	McMASTER #91251A345 OR EQUIV.	10-32 x 3/4 LG. SOCKET HD CAP SCREW, BLACK ALLOY STEEL.
	54	4	McMASTER #91251A344 OR EQUIV.	10-32 x 5/8 LG. BUTTON HD CAP SCREW, BLACK ALLOY STEEL.
	55	16	McMASTER #98032A481 OR EQUIV.	#10 FLAT WASHER .250 ID x .562 OD x .051 THK. SS
	56	2	McMASTER #91290A438 OR EQUIV.	M8 x 35 SOCKET HEAD CAP SCREW, BLACK ALLOY STEEL.
	57	38	McMASTER #91290A434 OR EQUIV.	M8 x 30 SOCKET HEAD CAP SCREW, BLACK ALLOY STEEL.
	58	4	McMASTER #91290A426 OR EQUIV.	M8 x 20mm LG SOCKET HD CAP SCREW, BLACK ALLOY STEEL
	59	4	McMASTER #91290A432 OR EQUIV.	M8 x 25mm LG. SOCKET HD CAP SCREW, BLACK ALLOY STEEL
	60	4	McMASTER #92095A284 OR EQUIV.	M8 x 20mm LG. BUTTON HD CAP SCREW, BLACK ALLOY STEEL.
	61	6	McMASTER #92095A260 OR EQUIV.	M8 x 16mm LG. BUTTON HD CAP SCREW, BLACK ALLOY STEEL.
	62	20	McMASTER #93475A270 OR EQUIV.	M8 FLAT WASHER
	63	8	McMASTER #91290A332 OR EQUIV.	M6 x 30mm LG SOCKET HD CAP SCREW. BLACK ALLOY STEEL.
	64	4	McMASTER #91290A182 OR EQUIV.	M4 x 35mm LG SOCKET HD CAP SCREW. BLACK ALLOY STEEL.
	65	2	--	METRIC SHAFT KEY. 8mm x 8mm x 28mm LG.
	66	4	--	METRIC SHAFT KEY. 6mm x 6mm x 25mm LG.
	67	1	--	METRIC SHAFT KEY. 6mm x 6mm x 30mm LG.
	68	1	--	METRIC SHAFT KEY. 4mm x 4mm x 16mm LG.
	69	2	McMASTER #92510A334 OR EQUIV.	3/8" O.D., #10 I.D. x 1" LG. ALUMINUM SPACER
	70	4	McMASTER #91251A194 OR EQUIV.	8-32 x 1/2 LG. SOCKET HD CAP SCREW, BLACK ALLOY STEEL.
	71			
	72			
	73			
	74			
	75			

26A8246A

NOTES: (UNLESS OTHERWISE SPECIFIED)
1. THESE PARTS ARE FACTORY ASSEMBLED.
2. ONLY 2 OF 32 SCREWS SHOWN.

MAT 2: . NOTES:
MAT 1: . NOTES:

REV	ZONE	CHANGES	DWG BY	DATE	CHK BY	DATE	APP BY	DATE

UNLESS OTHERWISE SPECIFIED
TOLERANCES: X ± - FRAC. ± - ; .XX ± - ANGLES ± ° ; .XXX ± - FINISH 125√
THREADS ARE CLASS 2
CHAMFER ENDS OF ALL SCREW THREADS 30° OUT 1.5 PITCH THRU RELIEF WITH ROUND NOSE TOOL ON MACHINE CUT THREADS.
BREAK EDGES .016 MAX. ON MACHINED WORK
REMOVE BURRS WELD SPLATTER & LOOSE SCALE
REFERENCES: ANSI Y14.5 & B46.1.

SHOP ORDERS
ACCT. NO. | SERIAL NO.
DATE ISSD. | DATE REQD. | NO. REQD.
DELIVER TO | IDENT METH | SEE NOTES
SURFACE TREATMENT.
DWG BY: ajdemell DATE 06-20-2003
CHK BY: ajdemell DATE 06-30-2003
APP BY: ajdemell DATE 06-30-2003

LAWRENCE BERKELEY LABORATORY
UNIVERSITY OF CALIFORNIA-BERKELEY
LIGHT SOURCE - BEND MAGNET BEAMLINES
BL 12.3.1 END STATION
GANTRY ASSEMBLY/INSTALLATION

PATENT CLEAR | DWG. TYPE: ASSEMBLY | SHOWN ON | SCALE 1:4 | DO NOT SCALE PRINTS
MICROFILMED | DESIGN ACCT. NO. - | CATEGORY CODE AL6193 | DWG. NO. 26A8246 | SIZE A | REV.
SHEET 1 OF 2

AUTO GENERATED PDF – Jul 02 2003 11:01:40 PDT

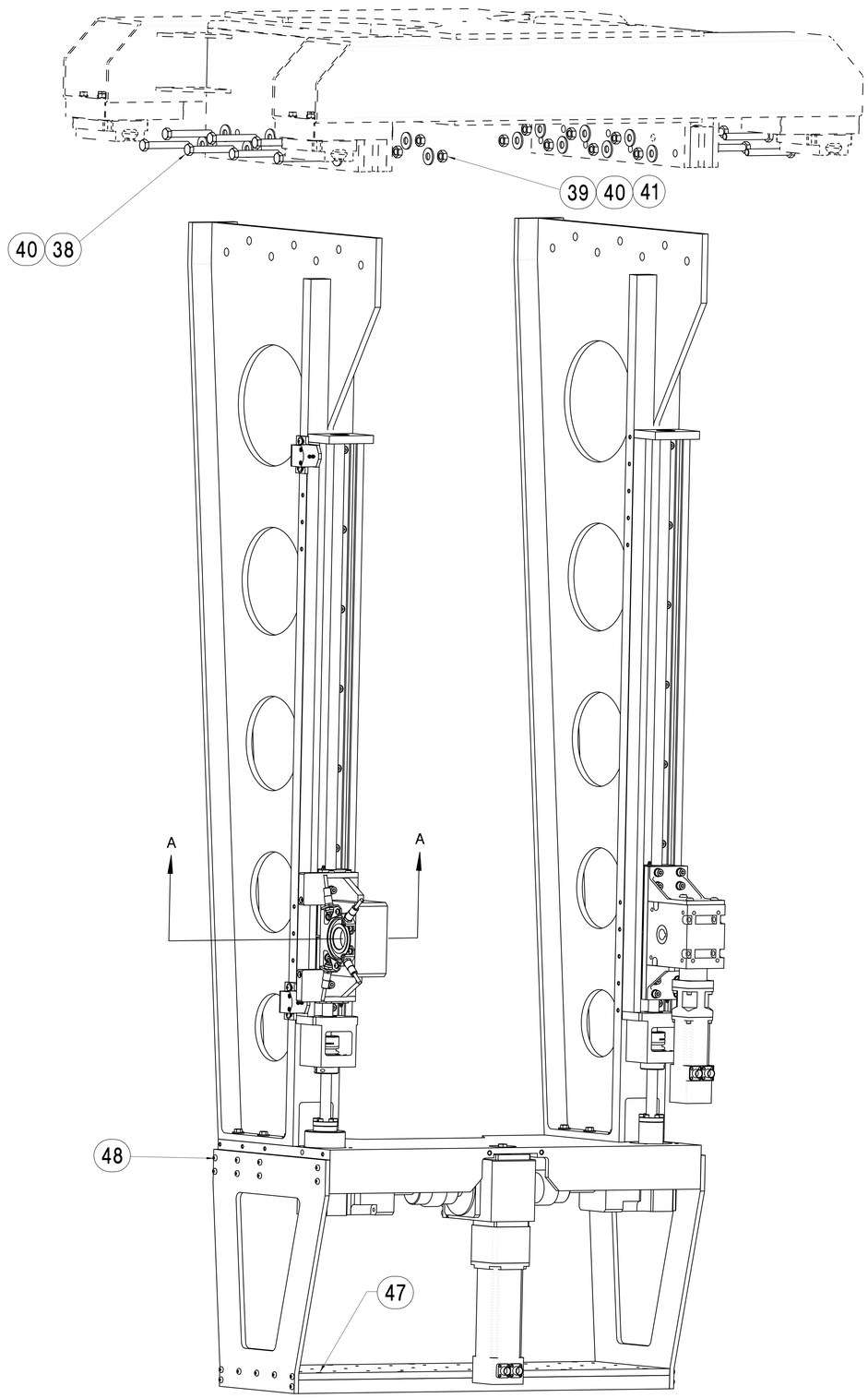

GEN1

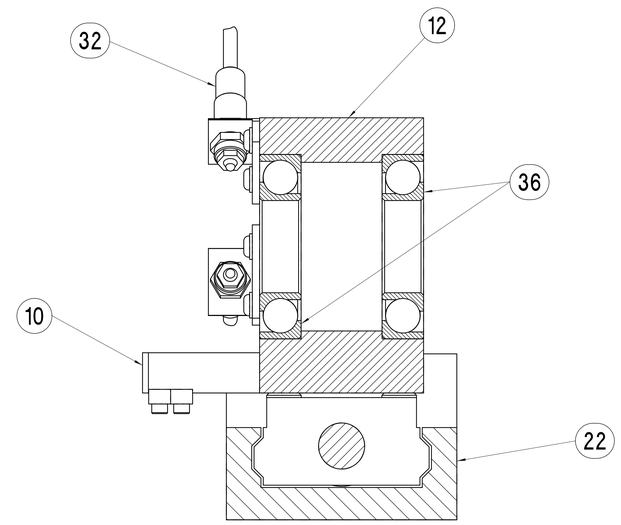

DETAIL OF PILLOW BLOCK
WITH BEARING PLACEMENT

SECTION A-A
SCALE 1:1

26A8246A

REV	ZONE	CHANGES	DWG BY	DATE	CHK BY	DATE	APP BY	DATE

UNLESS OTHERWISE SPECIFIED
TOLERANCES: .X ± – FRAC. ± – ; .XX ± – ANGLES ± ° ; .XXX ± – FINISH 125√
THREADS ARE CLASS 2
CHAMFER ENDS OF ALL SCREW THREADS 30° OUT 1.5 PITCH THRD RELIEF WITH ROUND NOSE TOOL ON MACHINE CUT THREADS.
BREAK EDGES .016 MAX. ON MACHINED WORK
REMOVE BURRS WELD SPLATTER & LOOSE SCALE
REFERENCES: ANSI Y14.5 & B46.1.

SHOP ORDERS
ACCT. NO. | SERIAL NO.
DATE ISSD | DATE REQD | NO. REQD.
DELIVER TO | IDENT. METH. | SEE NOTES
SURFACE TREATMENT.
DWG BY ajdemell DATE 06-20-2003
CHK BY ajdemell DATE 06-30-2003
APP BY ajdemell DATE 06-30-2003

MAT 2: . NOTES:
MAT 1: . NOTES:

LAWRENCE BERKELEY LABORATORY
UNIVERSITY OF CALIFORNIA-BERKELEY
LIGHT SOURCE - BEND MAGNET BEAMLINES
BL 12.3.1 END STATION
GANTRY ASSEMBLY/INSTALLATION

PATENT CLEAR	DWG. TYPE	SHOWN ON	SCALE 1:4	DO NOT SCALE PRINTS
	ASSEMBLY		DWG. NO. 26A8246	SIZE A	REV.
MICROFILMED	DESIGN ACCT. NO. –	CATEGORY CODE AL6193		

SHEET 2 OF 2

AUTO GENERATED PDF – Jul 02 2003 11:01:51 PDT