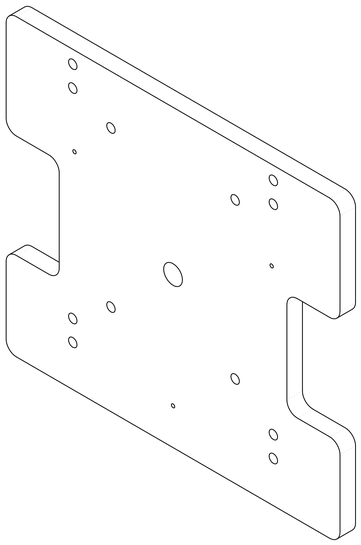

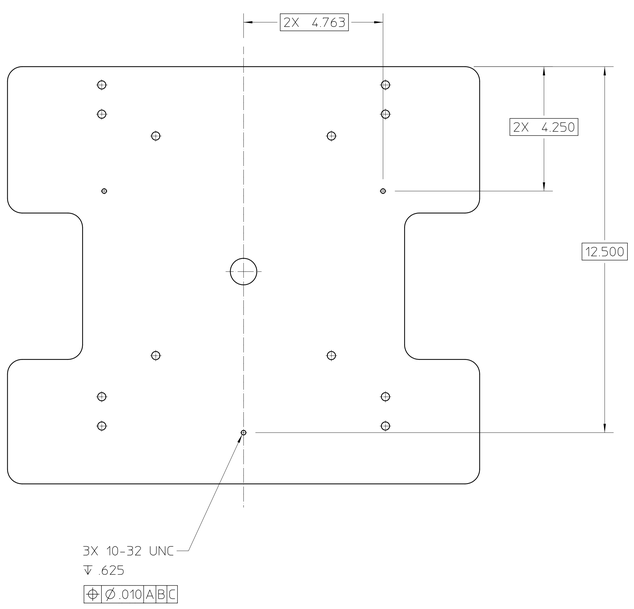

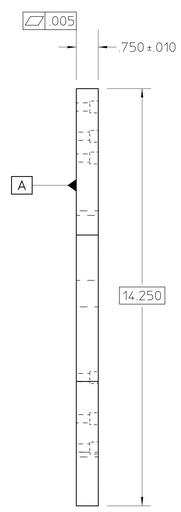

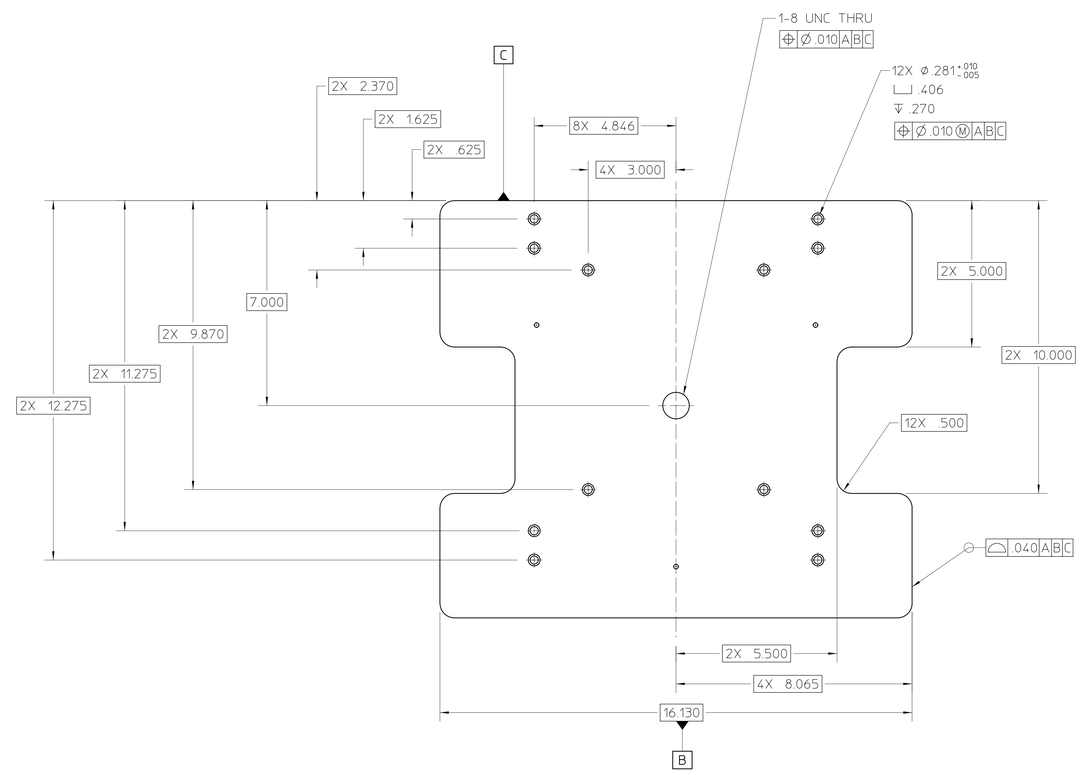

26A8166A

NOTES: (UNLESS OTHERWISE SPECIFIED)

1. ALL HIDDEN LINES MAY NOT BE SHOWN.

REV	ZONE	CHANGES	DWG BY	DATE	CHK BY	DATE	APP BY	DATE

UNLESS OTHERWISE SPECIFIED
TOLERANCES: X ± .1 FRAC. ± - ; .XX ± .02 ANGLES ±1/2° ; .XXX ± .010 FINISH 125√
THREADS ARE CLASS 2
CHAMFER ENDS OF ALL SCREW THREADS 30°
CUT 1.5 PITCH THRD RELIEF WITH ROUND NOSE TOOL ON MACHINE CUT THREADS.
BREAK EDGES .016 MAX. ON MACHINED WORK.
REMOVE BURRS WELD SPLATTER & LOOSE SCALE
REFERENCES: ANSI Y14.5 & B46.1.

SHOP ORDERS
ACCT. NO. | SERIAL NO.
DATE ISSD. | DATE REQD. | NO. REQD.
DELIVER TO | IDENT. METH. | SEE NOTES
SURFACE TREATMENT BLACK ANODIZE
DWG BY ajdemell DATE 06-09-2003
CHK BY ajdemell DATE 06-26-2003
APP BY ajdemell DATE 06-26-2003

MAT 2: . NOTES:
MAT 1: PLATE, ALUMINUM 6061 NOTES:

LAWRENCE BERKELEY LABORATORY
UNIVERSITY OF CALIFORNIA-BERKELEY
LIGHT SOURCE - BEND MAGNET BEAMLINES
BL 12.3.1 END STATION
KINEMATIC BASE PLATE

PATENT CLEAR | DWG. TYPE DETAIL | SHOWN ON | SCALE 1 : 2 | DO NOT SCALE PRINTS
MICROFILMED | DESIGN ACCT. NO. - | CATEGORY CODE AL6193 | DWG. NO. 26A8166 | SIZE A | REV.
SHEET 1 OF 1

AUTO GENERATED PDF – Jun 26 2003 09:21:43 PDT