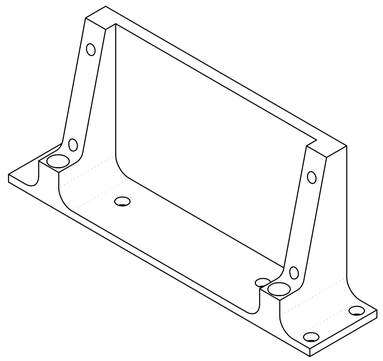

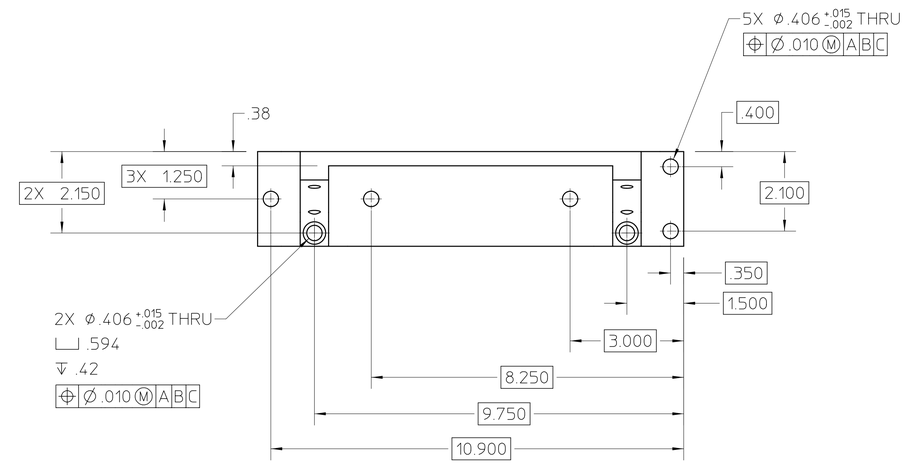

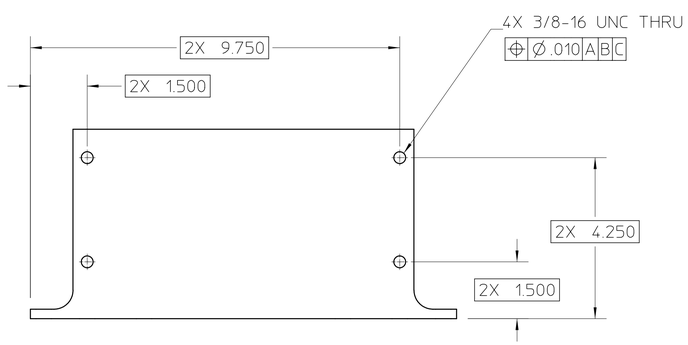

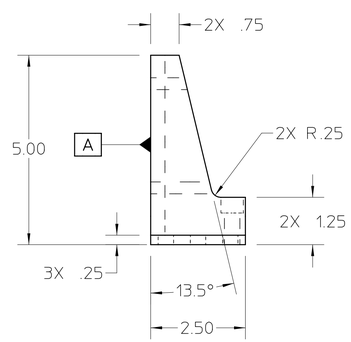

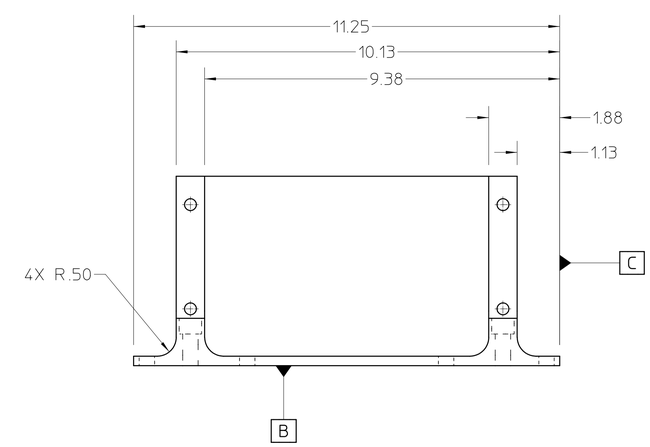

26A8064A

NOTES: (UNLESS OTHERWISE SPECIFIED)
1. ALL HIDDEN LINES MAY NOT BE SHOWN.

REV	ZONE	CHANGES	DWG BY	DATE	CHK BY	DATE	APP BY	DATE

UNLESS OTHERWISE SPECIFIED

TOLERANCES			
	X ± .1	FRAC. ± -	
	XX ± .02	ANGLES ± 1/2°	
	XXX ± .010	FINISH 125√	

THREADS ARE CLASS 2
CHAMFER ENDS OF ALL SCREW THREADS 30°
CUT 1.5 PITCH THRD RELIEF WITH ROUND NOSE TOOL ON MACHINE CUT THREADS
BREAK EDGES .016 MAX. ON MACHINED WORK
REMOVE BURRS WELD SPLATTER & LOOSE SCALE
REFERENCES: ANSI Y14.5 & B46.1.

SHOP ORDERS

ACCT. NO		SERIAL NO.	
DATE ISSD.	DATE REQD.	NO. REQD.	
DELIVER TO		IDENT. METH.	SEE NOTES
SURFACE TREATMENT	BLACK ANODIZE		
DWG. BY	ajdemell	DATE	06-16-2003
CHK. BY	ajdemell	DATE	06-26-2003
APP. BY	ajdemell	DATE	06-26-2003

MAT 2: . NOTES:
MAT 1: BLOCK, ALUMINUM 6061 NOTES:

LAWRENCE BERKELEY LABORATORY
UNIVERSITY OF CALIFORNIA-BERKELEY
LIGHT SOURCE - BEND MAGNET BEAMLINES
BL 12.3.1 END STATION
CRADLE DRIVEN SIDE PLATE GUSSET

PATENT CLEAR	DWG. TYPE	SHOWN ON	SCALE 1:2	DO NOT SCALE PRINTS
	DETAIL			
MICROFILMED	DESIGN ACCT. NO.	CATEGORY CODE	DWG. NO. 26A8064	SIZE A	REV.
	-	AL6193		

SHEET 1 OF 1

AUTO GENERATED PDF – Jun 26 2003 09:22:48 PDT