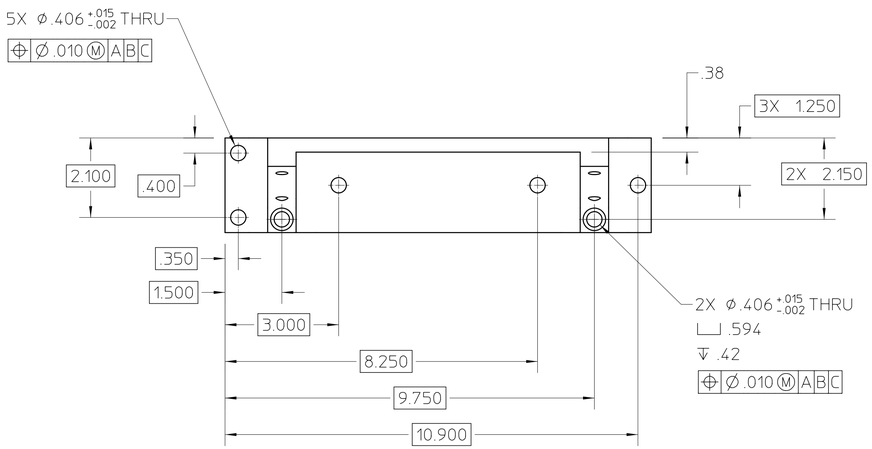


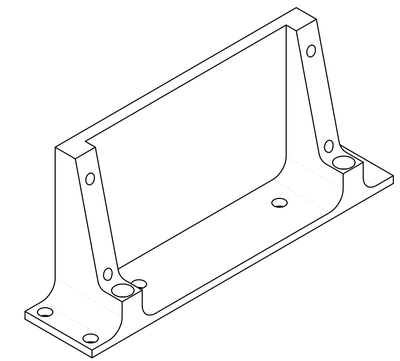

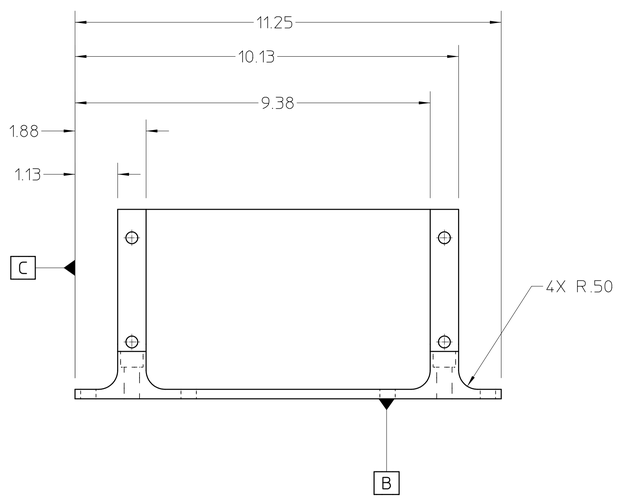


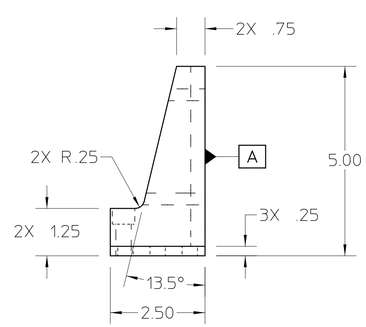


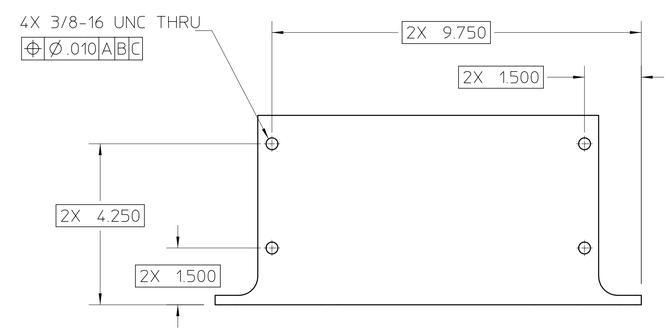


26A8054A

NOTES: (UNLESS OTHERWISE SPECIFIED)
1. ALL HIDDEN LINES MAY NOT BE SHOWN.

| REV | ZONE | CHANGES | DWG BY | DATE | CHK BY | DATE | APP BY | DATE |
|---|---|---|---|---|---|---|---|---|

UNLESS OTHERWISE SPECIFIED
TOLERANCES: .X ± .1 FRAC. ± – ; .XX ± .02 ANGLES ± 1/2° ; .XXX ± .010 FINISH 125√
THREADS ARE CLASS 2
CHAMFER ENDS OF ALL SCREW THREADS 30° CUT 1.5 PITCH THRD RELIEF WITH ROUND NOSE TOOL ON MACHINE CUT THREADS.
BREAK EDGES .016 MAX. ON MACHINED WORK
REMOVE BURRS WELD SPLATTER & LOOSE SCALE
REFERENCES: ANSI Y14.5 & B46.1.

SHOP ORDERS
ACCT. NO. | SERIAL NO.
DATE ISSD. | DATE REQD. | NO. REQD.
DELIVER TO | IDENT. METH. | SEE NOTES
SURFACE TREATMENT BLACK ANODIZE
DWG. BY ajdemell | DATE 06-16-2003
CHK. BY ajdemell | DATE 06-26-2003
APP. BY ajdemell | DATE 06-26-2003

MAT 2: . | NOTES:
MAT 1: BLOCK, ALUMINUM 6061 | NOTES:

LAWRENCE BERKELEY LABORATORY
UNIVERSITY OF CALIFORNIA-BERKELEY
LIGHT SOURCE - BEND MAGNET BEAMLINES
BL 12.3.1 END STATION
CRADLE FOLLOWER SIDE PLATE GUSSET

| PATENT CLEAR | DWG. TYPE | SHOWN ON | SCALE 1:2 | DO NOT SCALE PRINTS |
|---|---|---|---|---|
| MICROFILMED | DETAIL | | | |
| | DESIGN ACCT. NO. | CATEGORY CODE | DWG. NO. 26A8054 | SIZE A | REV. |
| | – | AL6193 | | |

SHEET 1 OF 1

AUTO GENERATED PDF – Jun 26 2003 09:22:38 PDT