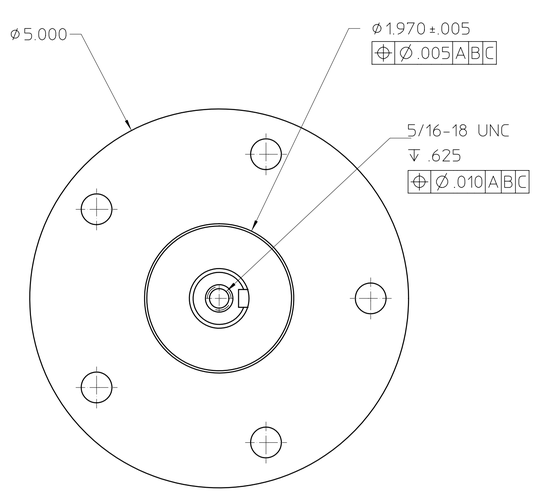

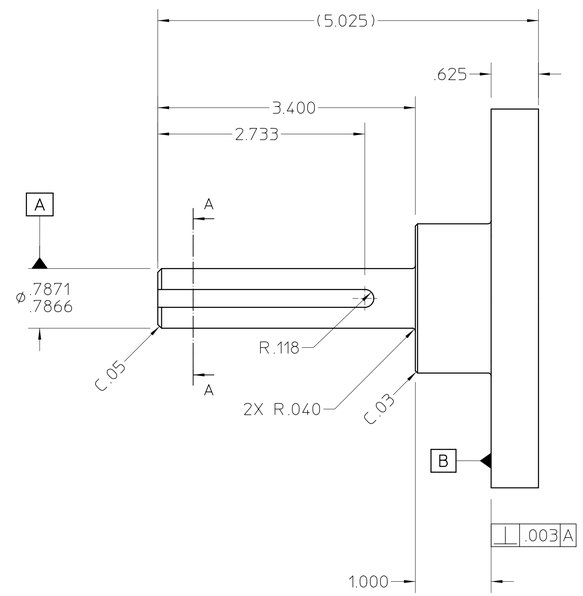

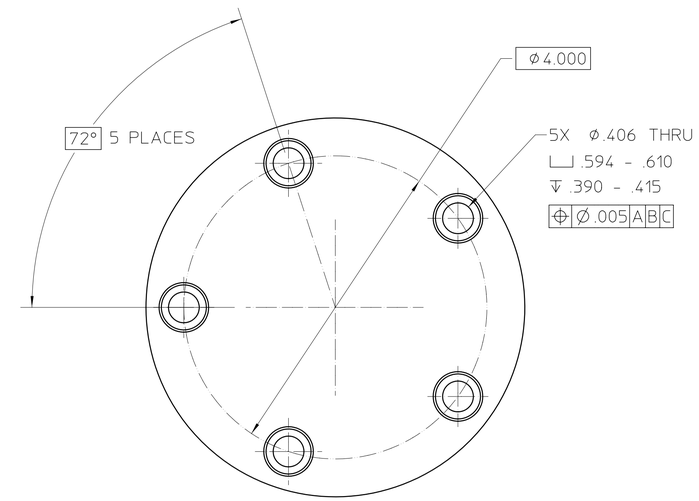

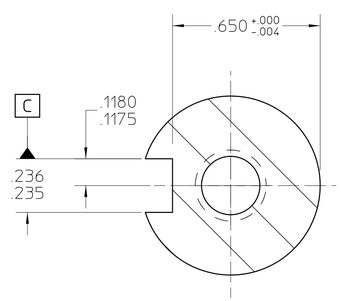

SECTION A-A
SCALE 3:1

26A7704A

NOTES: (UNLESS OTHERWISE SPECIFIED)
1. ALL HIDDEN LINES MAY NOT BE SHOWN.
2. DEGREASE

MAT 2: .	NOTES:
MAT 1: , STAINLESS STEEL 304	NOTES:

REV	ZONE	CHANGES	DWG BY	DATE	CHK BY	DATE	APP BY	DATE

UNLESS OTHERWISE SPECIFIED
TOLERANCES: .X ± .1 | FRAC. ± – | .XX ± .02 | ANGLES ± 1/2° | .XXX ± .010 | FINISH 125√
THREADS ARE CLASS 2
CHAMFER ENDS OF ALL SCREW THREADS 30°.
CUT 1.5 PITCH THRD RELIEF WITH ROUND NOSE TOOL ON MACHINE CUT THREADS.
BREAK EDGES .016 MAX. ON MACHINED WORK
REMOVE BURRS WELD SPLATTER & LOOSE SCALE
REFERENCES: ANSI Y14.5 & B46.1.

SHOP ORDERS
ACCT. NO. | SERIAL NO.
DATE ISSD. | DATE REQD. | NO. REQD.
DELIVER TO | IDENT. METH. | SEE NOTES
SURFACE TREATMENT SEE NOTES
DWG. BY gjdemell | DATE 06-09-2003
CHK. BY gjdemell | DATE 06-12-2003
APP. BY kelez | DATE 06-12-2003

LAWRENCE BERKELEY LABORATORY
UNIVERSITY OF CALIFORNIA-BERKELEY
LIGHT SOURCE - BEND MAGNET BEAMLINES
BL 12.3.1 END STATION
DRIVEN SHAFT, GUDEL WORM GEAR REDUCER

PATENT CLEAR	DWG. TYPE	SHOWN ON	SCALE 1 : 1	DO NOT SCALE PRINTS
MICROFILMED	DETAIL		DWG. NO. 26A7704	SIZE A / REV.
	DESIGN ACCT. NO. –	CATEGORY CODE AL6193		

SHEET 1 OF 1

AUTO GENERATED PDF – Jun 12 2003 15:42:54 PDT