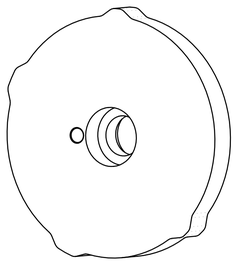

FRONT
SCALE 1:1

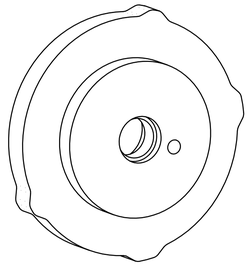

BACK
SCALE 1:1

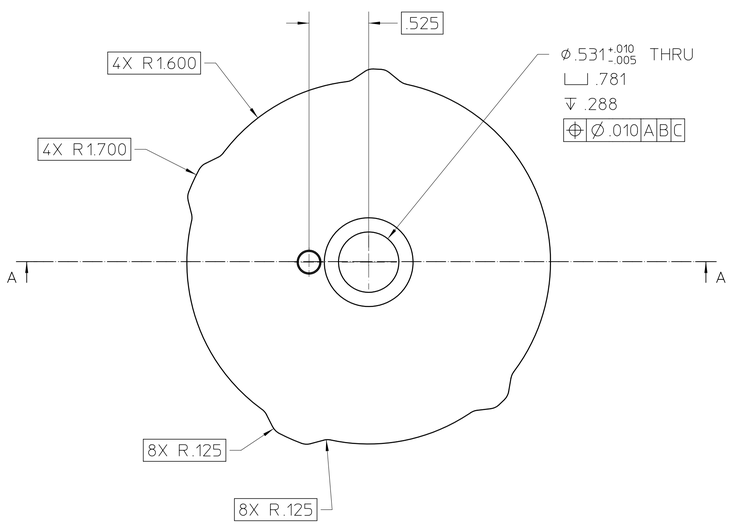

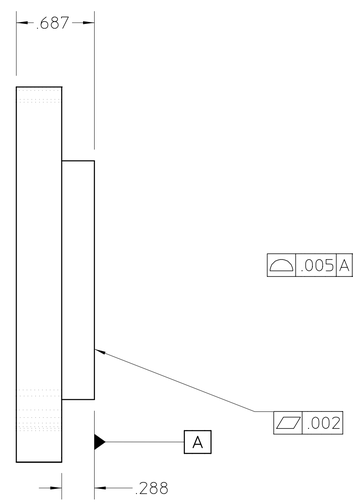

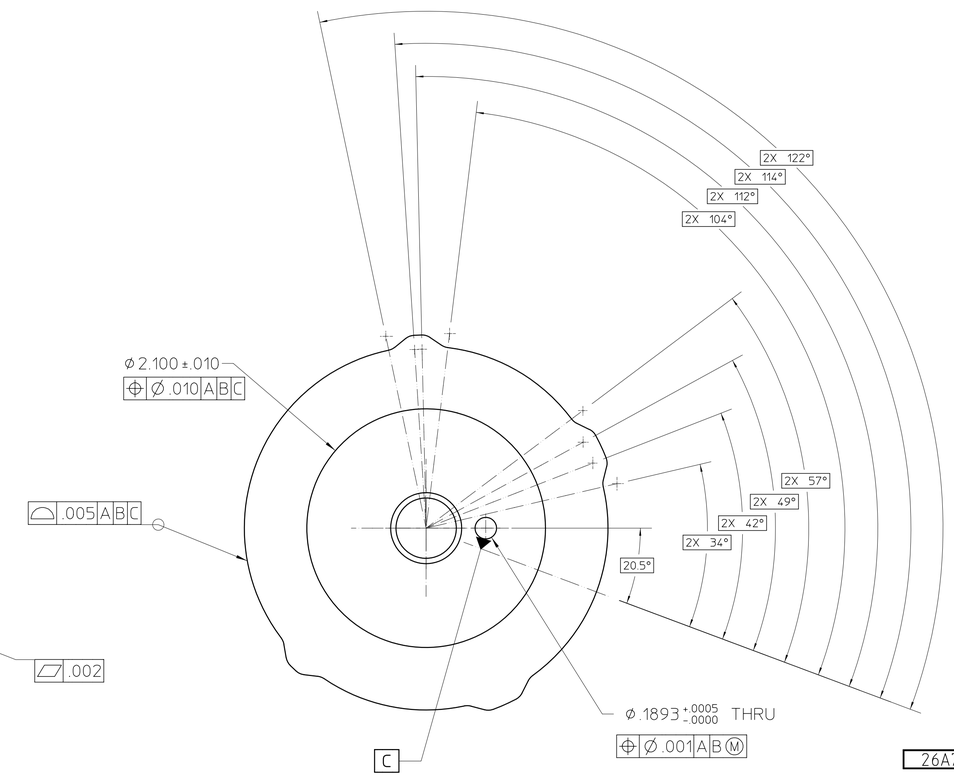

26A7434A

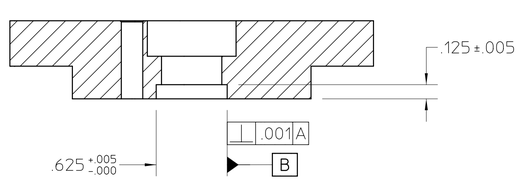

SECTION A-A

NOTES: (UNLESS OTHERWISE SPECIFIED)
1. ALL HIDDEN LINES MAY NOT BE SHOWN.
2. DEGREASE

REV	ZONE	CHANGES	DWG BY	DATE	CHK BY	DATE	APP BY	DATE

UNLESS OTHERWISE SPECIFIED
TOLERANCES: .X ± .1 | FRAC. ± - | .XX ± .010 | ANGLES ± .5° | .XXX ± .010 | FINISH 125
THREADS ARE CLASS 2
CHAMFER ENDS OF ALL SCREW THREADS 30°.
CUT 1.5 PITCH THRD RELIEF WITH ROUND NOSE TOOL ON MACHINE CUT THREADS.
BREAK EDGES .016 MAX. ON MACHINED WORK
REMOVE BURRS WELD SPLATTER & LOOSE SCALE
REFERENCES: ANSI Y14.5 & B46.1.

SHOP ORDERS
ACCT. NO. | SERIAL NO.
DATE ISSD. | DATE REQD. | NO. REQD.
DELIVER TO | IDENT. METH. SEE NOTES
SURFACE TREATMENT SEE NOTES
DWG. BY ajdemell | DATE 05-28-2003
CHK. BY ajdemell | DATE 06-12-2003
APP. BY kelez | DATE 06-12-2003

MAT 2: . | NOTES:
MAT 1: , STAINLESS STEEL | NOTES:

LAWRENCE BERKELEY LABORATORY
UNIVERSITY OF CALIFORNIA-BERKELEY
LIGHT SOURCE - BEND MAGNET BEAMLINES
BL 12.3.1 END STATION
DETECTOR ROTARY AXIS CAM

PATENT CLEAR	DWG. TYPE	SHOWN ON	SCALE	DO NOT SCALE PRINTS
	DETAIL		1.5:1	
MICROFILMED	DESIGN ACCT. NO.	CATEGORY CODE	DWG. NO.	SIZE / REV.
	-	AL6193	26A7434	A

SHEET 1 OF 1

AUTO GENERATED PDF – Jun 12 2003 15:42:34 PDT