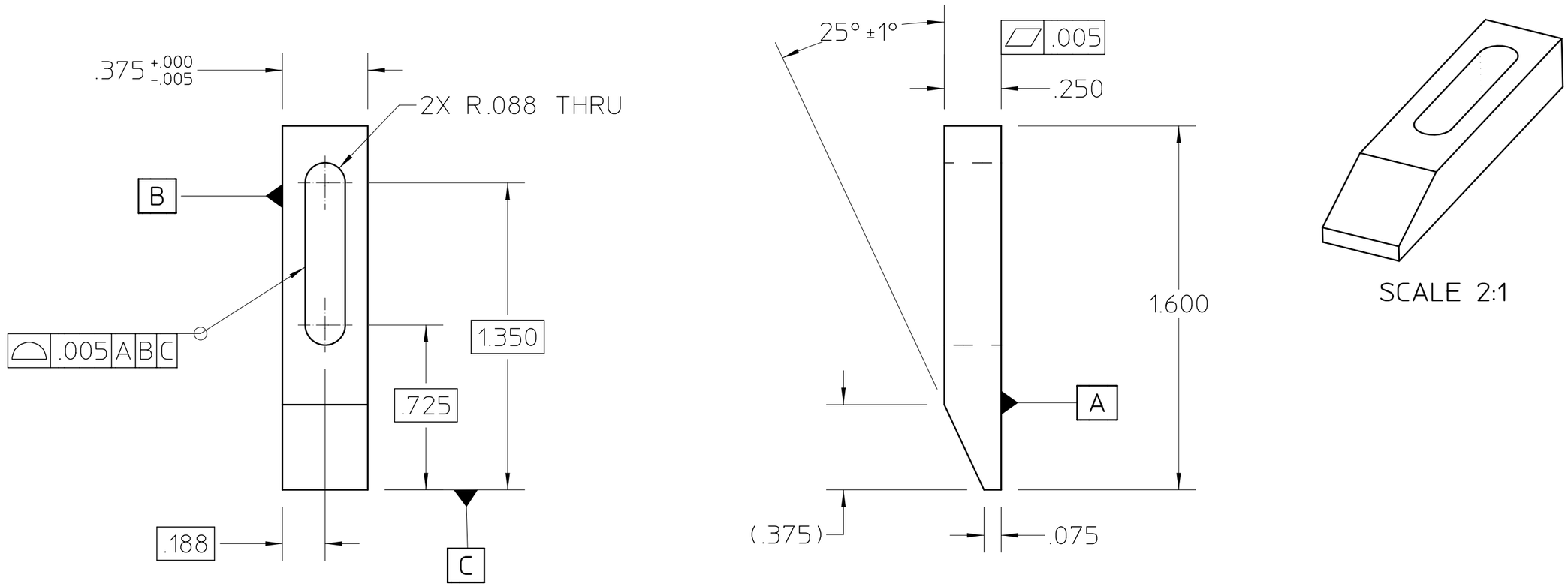

NOTES: (UNLESS OTHERWISE SPECIFIED)

1. DIMENSIONING AND TOLERANCING PER ASME Y14.5M-1994. ALL DIMENSIONS ARE IN INCHES. REFERENCE DIMENSIONS ARE SHOWN IN PARENTHESIS.
2. ALL HIDDEN LINES MAY NOT BE SHOWN.

MAT 2: ,	NOTES:
MAT 1: , STAINLESS STEEL	NOTES:

REV	ZONE	CHANGES	DWG BY	DATE

UNLESS OTHERWISE SPECIFIED

TOLERANCE .X ±.1 .XX ± .02 .XXX ±.010

SURFACE FINISH 125 ✓

1. SAWED, FLAMECUT, SHEARED OR CUT STOCK FINISH.
2. THREADS CLASS 2.
3. CHAMFER ENDS OF ALL SCREW THRDS 30°.
4. 1 1/2 PITCH RELIEF WITH ROUND NOSE TOOL ON ALL MACHINE CUT THRDS.
5. BREAK EDGES 1/64 MAX. ON MACHINE WORK.
6. REMOVE BURRS, LOOSE SCALE AND WELD SPLATTER.
7. REF.-USASI OR ASA STDS SECT Y-14 & B46-1.

SHOP ORDERS

ACCT NO	SER NO	
DATE ISSD	DATE REQD	NO REQD
DELIVER TO	IDENT METH	SEE NOTES
SURFACE TREATMENT	DEGREASE	
DWG BY ajdemell		DATE 05-27-2003
CHK BY ajdemell		DATE 06-12-2003
APP BY kelez		DATE 06-12-2003

LAWRENCE BERKELEY LABORATORY
UNIVERSITY OF CALIFORNIA-BERKELEY

LIGHT SOURCE - BEND MAGNET BEAMLINES

BL 12.3.1 END STATION

EUCHNER SWITCH TRIP

PAT CLEAR	DWG TYPE DETAIL	SHOWN ON	SCALE: 2:1
			DO NOT SCALE PRINTS
MICROFILMED	DESIGN ACCT NO -	CATEGORY CODE AL6193	DWG NO 26A7332 Size A Rev

SHEET 1 OF 1

AUTO GENERATED PDF – Jun 12 2003 15:41:42 PDT