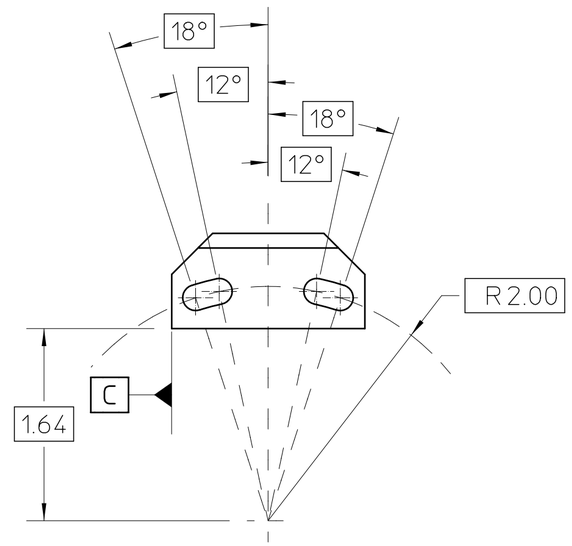

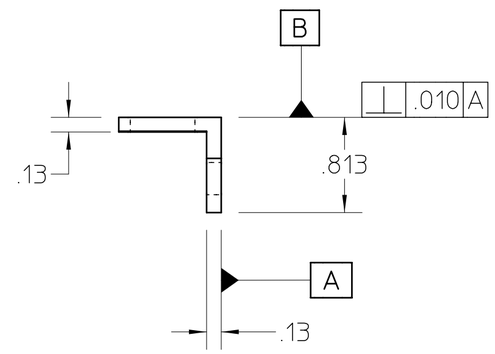

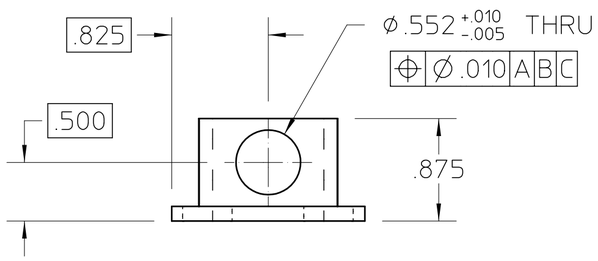

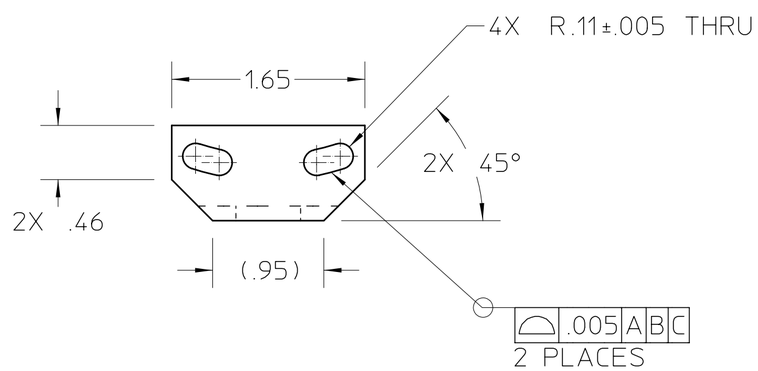

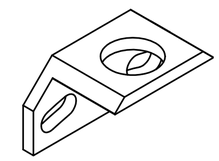

ISO FRONT

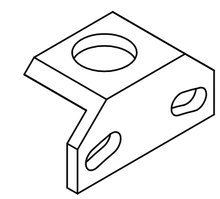

ISO BACK

26A7313B

NOTES: (UNLESS OTHERWISE SPECIFIED)

1. DIMENSIONING AND TOLERANCING PER ASME Y14.5M-1994. ALL DIMENSIONS ARE IN INCHES. REFERENCE DIMENSIONS ARE SHOWN IN PARENTHESIS.
2. REMOVE ALL BURRS AND BREAK ALL SHARP EDGES.
3. NOT ALL HIDDEN LINES SHOWN.
4. ANODIZE BLACK

MAT 2: ,	NOTES:
MAT 1: , ALUMINUM 6061	NOTES:

REV	ZONE	CHANGES	DWG BY	DATE	CHK BY	DATE	APP BY	DATE
B	C3	CHANGE ⌀.591 HOLE TO ⌀.552	ajdemell	06-17-2003	N/A			

UNLESS OTHERWISE SPECIFIED

TOLERANCES			
.X ± .1	FRAC. ± -		
.XX ± .01	ANGLES ± .5°		
.XXX ± .005	FINISH 125√		

THREADS ARE CLASS 2
CHAMFER ENDS OF ALL SCREW THREADS 30°.
CUT 1.5 PITCH THRD RELIEF WITH ROUND NOSE TOOL ON MACHINE CUT THREADS.
BREAK EDGES .016 MAX. ON MACHINED WORK
REMOVE BURRS WELD SPLATTER & LOOSE SCALE
REFERENCES: ANSI Y14.5 & B46.1.

SHOP ORDERS		
ACCT. NO.	SERIAL NO.	
DATE ISSD.	DATE REQD.	NO REQD.
DELIVER TO	IDENT METH. SEE NOTES	
SURFACE TREATMENT BLACK ANODIZE		
DWG. BY ajdemell	DATE 05-23-2003	
CHK. BY ajdemell	DATE 06-12-2003	
APP. BY kelez	DATE 06-12-2003	

LAWRENCE BERKELEY LABORATORY
UNIVERSITY OF CALIFORNIA-BERKELEY

LIGHT SOURCE - BEND MAGNET BEAMLINES

BL 12.3.1 END STATION

BRACKET, EUCHNER HOLE TYPE LIMIT SWITCH

PATENT CLEAR	DWG. TYPE	SHOWN ON	SCALE 1 : 1	DO NOT SCALE PRINTS
	DETAIL			
MICROFILMED	DESIGN ACCT. NO.	CATEGORY CODE	DWG. NO. 26A7313	SIZE / REV. B
	-	AL6193		

SHEET 1 OF 1

AUTO GENERATED PDF – Jun 17 2003 10:51:22 PDT