REQD	ITEM	PART NO.	DESCRIPTION
1	2	26A7094	SHELF BRACE
2	1	26A7034	SHELF BREAD BOARD
3	2	26A7004	SHELF SIDE PLATE
4	10		SOCKET HD. CAP 1/4"-20UNC X .75 LG.
5	30		BUTTON HD. CAP 1/4"-20UNC X .75 LG.

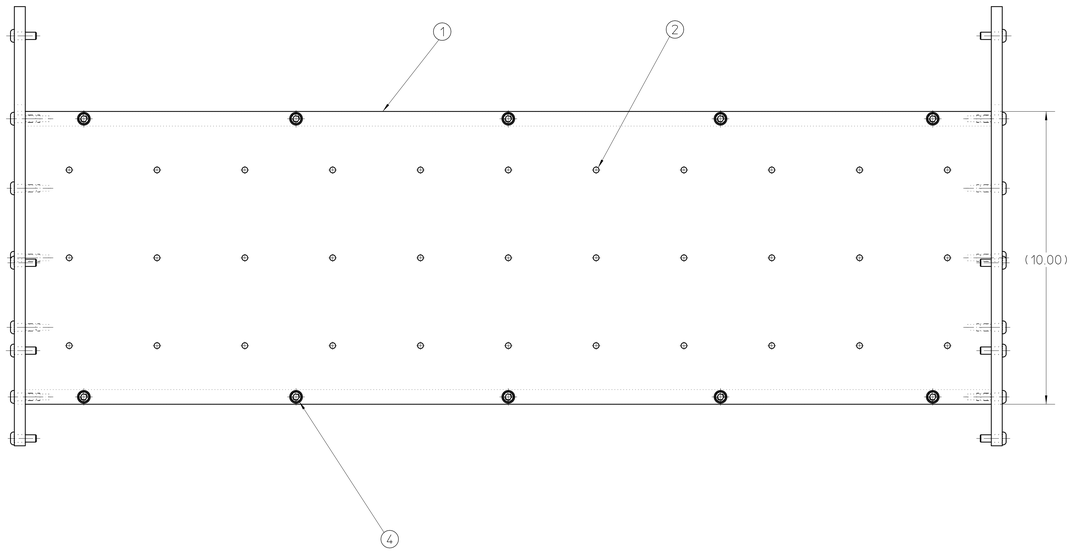

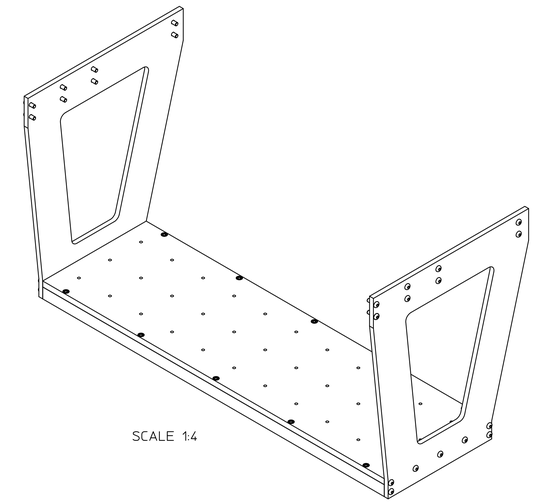

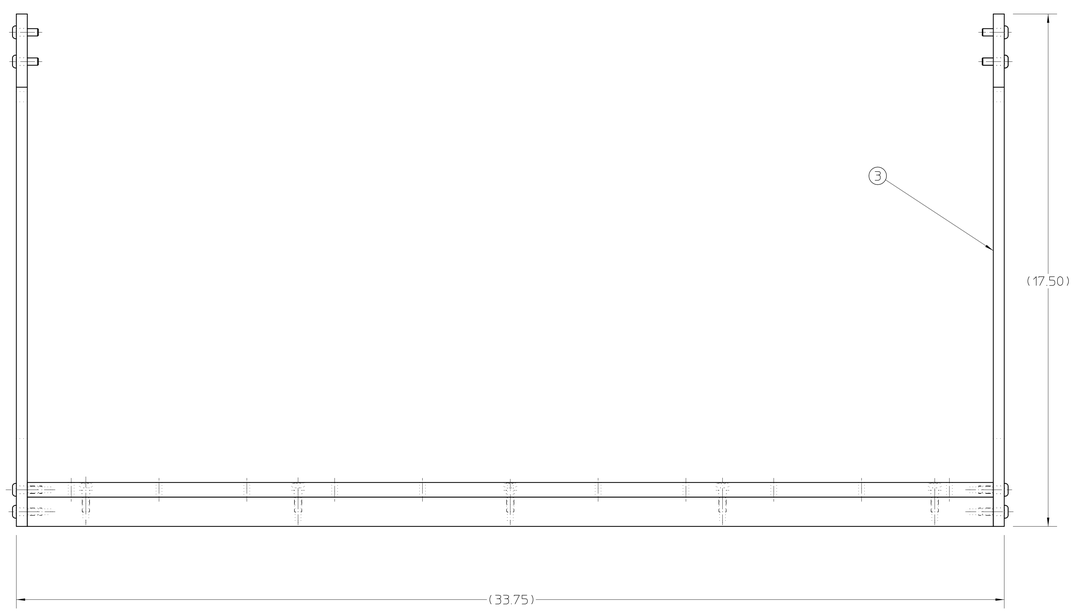

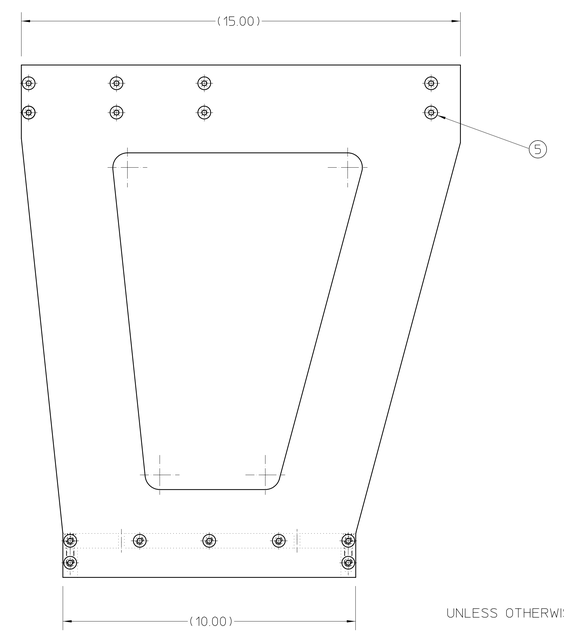

26A7126A

UNLESS OTHERWISE SPECIFIED,

1) ALL DIMENSIONS ARE IN INCHES.

2) POSITIONAL TOLERANCES AND DATUM FEATURES OF SIZE APPLY REGARDLESS OF FEATURE SIZE.

3) PROTECT FINISHED PART BY BAGGING OR SIMILAR METHOD TO PROTECT AND MAINTAIN CLEANLINESS DURING SHIPMENT AND STORAGE.

REV	ZONE	CHANGES	DWG BY	DATE	CHK BY	DATE	APP BY	DATE

UNLESS OTHERWISE SPECIFIED
TOLERANCES: X ± .1 FRAC. ± 1/64; .XX ± .01 ANGLES ± 1°; .XXX ± .015 FINISH 125
THREADS ARE CLASS 2
CHAMFER ENDS OF ALL SCREW THREADS 30° CUT 1.5 PITCH THRD RELIEF WITH ROUND NOSE TOOL ON MACHINE CUT THREADS.
BREAK EDGES .016 MAX. ON MACHINED WORK
REMOVE BURRS WELD SPLATTER & LOOSE SCALE
REFERENCES: ANSI Y14.5 & B46.1.

SHOP ORDERS
ACCT. NO. | SERIAL NO.
DATE ISSD | DATE REQD | NO. REQD.
DELIVER TO | IDENT METH | REF. NOTES
SURFACE TREATMENT
DWG BY knolls | DATE 03-19-2003
CHK BY knolls | DATE 06-04-2003
APP BY kelez | DATE 06-04-2003

MAT 2: . | NOTES:
MAT 1: . | NOTES:

LAWRENCE BERKELEY LABORATORY
UNIVERSITY OF CALIFORNIA-BERKELEY
LIGHT SOURCE - BEND MAGNET BEAMLINES
BL 12.3.1 END STATION
GANTRY SHELF ASSEMBLY

PATENT CLEAR	DWG. TYPE	SHOWN ON	SCALE 1:2	DO NOT SCALE PRINTS
	ASSEMBLY			
MICROFILMED	DESIGN ACCT. NO.	CATEGORY CODE	DWG. NO. 26A7126	SIZE A	REV.
	-	AL61.93		

SHEET 1 OF 1

AUTO GENERATED PDF – Jun 04 2003 15:11:59 PDT