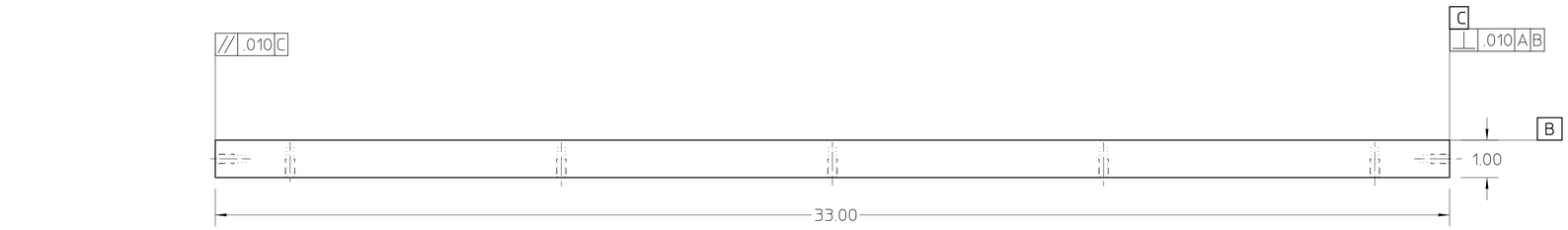

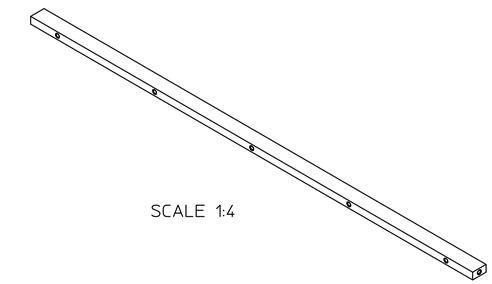

SCALE 1:4

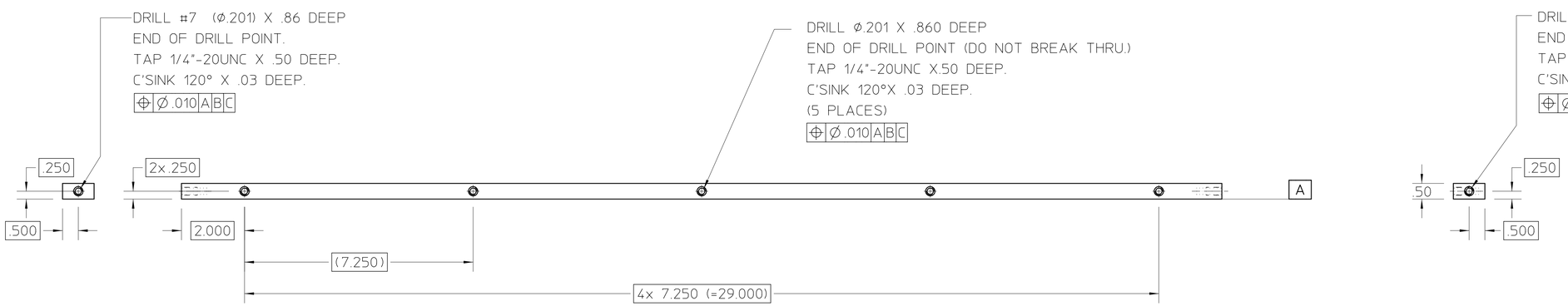

26A7094A

UNLESS OTHERWISE SPECIFIED,

1) ALL DIMENSIONS ARE IN INCHES.

2) POSITIONAL TOLERANCES AND DATUM FEATURES OF SIZE APPLY REGARDLESS OF FEATURE SIZE.

3) PROTECT FINISHED PART BY BAGGING OR SIMILAR METHOD TO PROTECT AND MAINTAIN CLEANLINESS DURING SHIPMENT AND STORAGE.

MAT 2: , NOTES:

MAT 1: , ALUMINUM 6061 NOTES:

REV	ZONE	CHANGES	DWG BY	DATE	CHK BY	DATE	APP BY	DATE

UNLESS OTHERWISE SPECIFIED

TOLERANCES: .X ± .1 FRAC. ±-1/64; .XX ± .01 ANGLES ± 1°; .XXX ± -.015 FINISH 125√

THREADS ARE CLASS 2
CHAMFER ENDS OF ALL SCREW THREADS 30°.
CUT 1.5 PITCH THRD RELIEF WITH ROUND NOSE TOOL ON MACHINE CUT THREADS.
BREAK EDGES .016 MAX. ON MACHINED WORK
REMOVE BURRS WELD SPLATTER & LOOSE SCALE
REFERENCES: ANSI Y14.5 & B46.1.

SHOP ORDERS

ACCT. NO.		SERIAL NO.	
DATE ISSD.	DATE REQD.	NO. REQD.	
DELIVER TO		IDENT. SEE METH. NOTES	
SURFACE TREATMENT	BLACK ANODIZE		
DWG. BY	knolls	DATE	05-16-2003
CHK. BY	knolls	DATE	06-04-2003
APP. BY	kelez	DATE	06-04-2003

LAWRENCE BERKELEY LABORATORY
UNIVERSITY OF CALIFORNIA-BERKELEY

LIGHT SOURCE - BEND MAGNET BEAMLINES
BL 12.3.1 END STATION

SHELF BRACE

PATENT CLEAR	DWG. TYPE	SHOWN ON	SCALE 1:2	DO NOT SCALE PRINTS
	DETAIL			
MICROFILMED	DESIGN ACCT. NO.	CATEGORY CODE	DWG. NO. 26A7094	SIZE A / REV.
	–	AL6193		

SHEET 1 OF 1

AUTO GENERATED PDF – Jun 04 2003 15:11:45 PDT