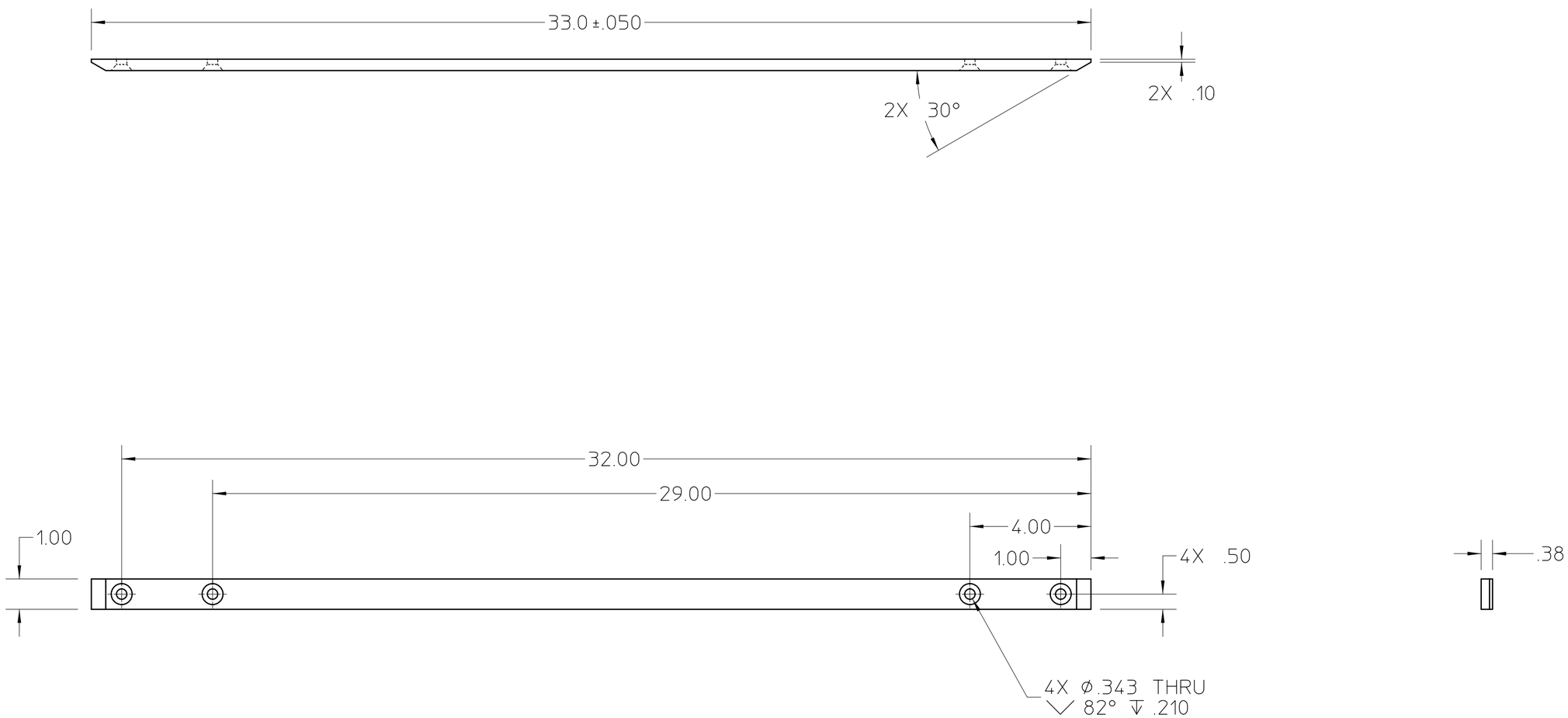

26A7023B

MAT 2: ,	NOTES:
MAT 1: BAR, CARBON STEEL	NOTES:

REV	ZONE	CHANGES	DWG BY	DATE	CHK BY	DATE	APP BY	DATE
B		CHANGE WIDTH TO 1 INCH	ajdemell	05-15-2003	N/A			

UNLESS OTHERWISE SPECIFIED

TOLERANCES			
	.X ± -	FRAC. ± -	
	.XX ± .02	ANGLES ±1/2°	
	.XXX ± .010	FINISH 125√	

THREADS ARE CLASS 2
CHAMFER ENDS OF ALL SCREW THREADS 30°.
CUT 1.5 PITCH THRD RELIEF WITH ROUND NOSE TOOL ON MACHINE CUT THREADS.
BREAK EDGES .016 MAX. ON MACHINED WORK
REMOVE BURRS WELD SPLATTER & LOOSE SCALE
REFERENCES: ANSI Y14.5 & B46.1.

SHOP ORDERS

ACCT. NO.	SERIAL NO.	
DATE ISSD.	DATE REQD.	NO REQD.
DELIVER TO	IDENT METH.	SEE NOTES
SURFACE TREATMENT	DEGREASE	
DWG. BY ajdemell		DATE 05-13-2003
CHK. BY ajdemell		DATE 05-13-2003
APP. BY kelez		DATE 05-13-2003

LAWRENCE BERKELEY LABORATORY
UNIVERSITY OF CALIFORNIA-BERKELEY

LIGHT SOURCE - BEND MAGNET BEAMLINES

BL 12.3.1 END STATION

ROTATION LIMIT SWITCH BAR

PATENT CLEAR	DWG. TYPE	SHOWN ON	SCALE	DO NOT SCALE PRINTS
	DETAIL		1 : 3	
MICROFILMED	DESIGN ACCT. NO.	CATEGORY CODE	DWG. NO.	SIZE / REV.
	-	AL6193	26A7023	B

SHEET 1 OF 1

AUTO GENERATED PDF – May 15 2003 09:01:20 PDT