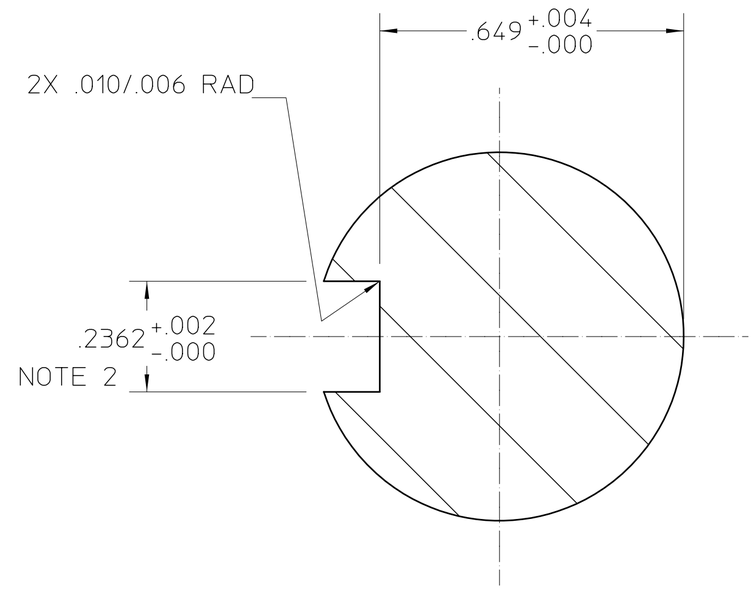

SECTION A-A
SCALE 4:1

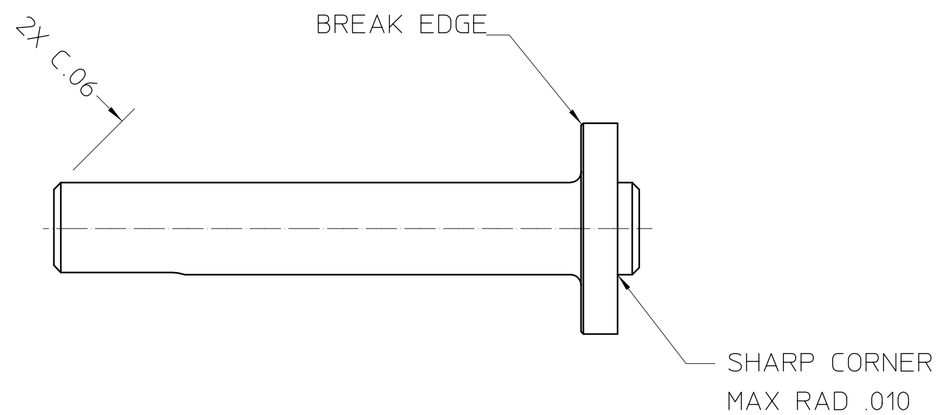

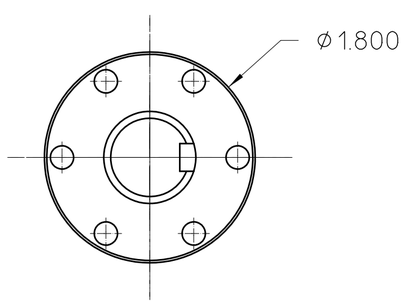

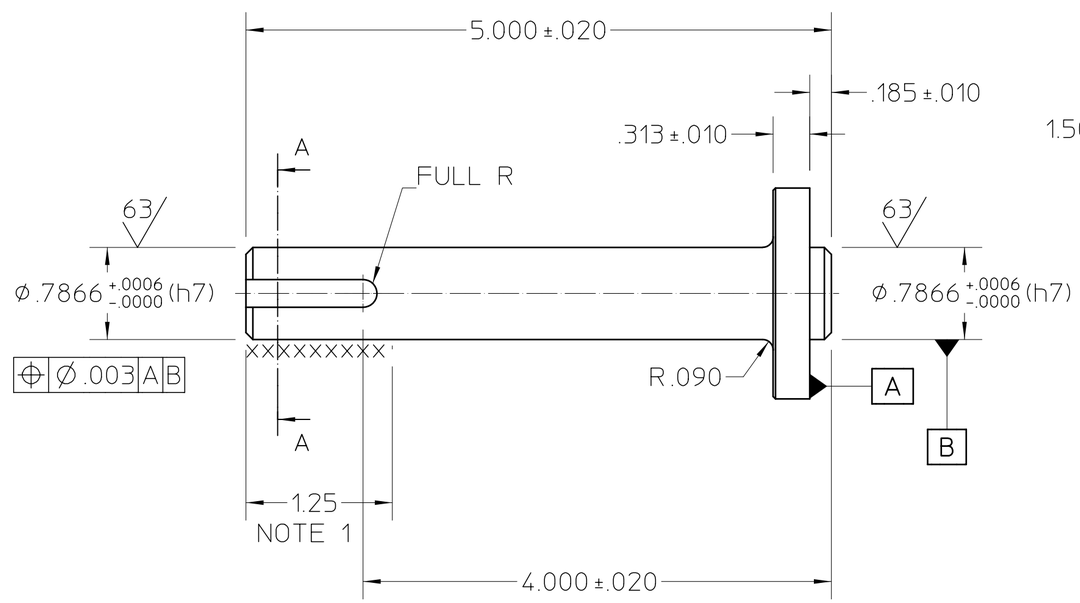

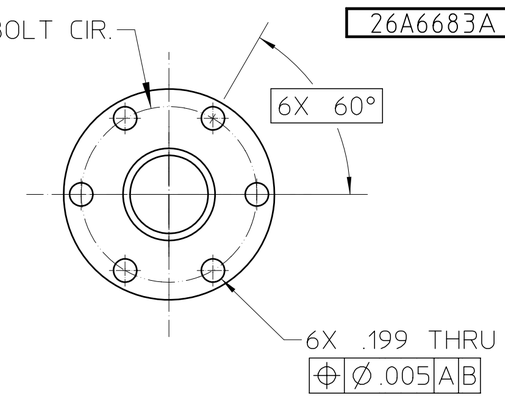

26A6683A

NOTES:
1. EXTENT OF DIAMETRICAL TOL
2. REFERENCE, 6mm KEYWAY

MAT 2: ,	NOTES:
MAT 1: ROD, STAINLESS STEEL 304	NOTES:

REV	ZONE	CHANGES	DWG BY	DATE	CHK BY	DATE	APP BY	DATE

UNLESS OTHERWISE SPECIFIED

TOLERANCES			
	.X ± .03	FRAC. ± -	
	.XX ± .010	ANGLES ±1/2°	
	.XXX ± .005	FINISH 125√	

THREADS ARE CLASS 2
CHAMFER ENDS OF ALL SCREW THREADS 30°.
CUT 1.5 PITCH THRD RELIEF WITH ROUND NOSE TOOL ON MACHINE CUT THREADS.
BREAK EDGES .016 MAX. ON MACHINED WORK
REMOVE BURRS WELD SPLATTER & LOOSE SCALE
REFERENCES: ANSI Y14.5 & B46.1.

SHOP ORDERS			
ACCT. NO.		SERIAL NO.	
DATE ISSD.	DATE REQD.	NO. REQD.	
DELIVER TO		IDENT METH.	SEE NOTES
SURFACE TREATMENT			
DWG. BY ajdemell		DATE 04-30-2003	
CHK. BY ajdemell		DATE 04-30-2003	
APP. BY kelez		DATE 04-30-2003	

LAWRENCE BERKELEY LABORATORY
UNIVERSITY OF CALIFORNIA-BERKELEY
LIGHT SOURCE - BEND MAGNET BEAMLINES
BL 12.3.1 END STATION
EXTENSION SHAFT

PATENT CLEAR	DWG. TYPE	SHOWN ON	SCALE 1 : 1	DO NOT SCALE PRINTS
	DETAIL			
MICROFILMED	DESIGN ACCT. NO.	CATEGORY CODE	DWG. NO. 26A6683	SIZE / REV. A
	-	AL6193		

SHEET NI OF 1

AUTO GENERATED PDF – Apr 30 2003 15:53:13 PDT