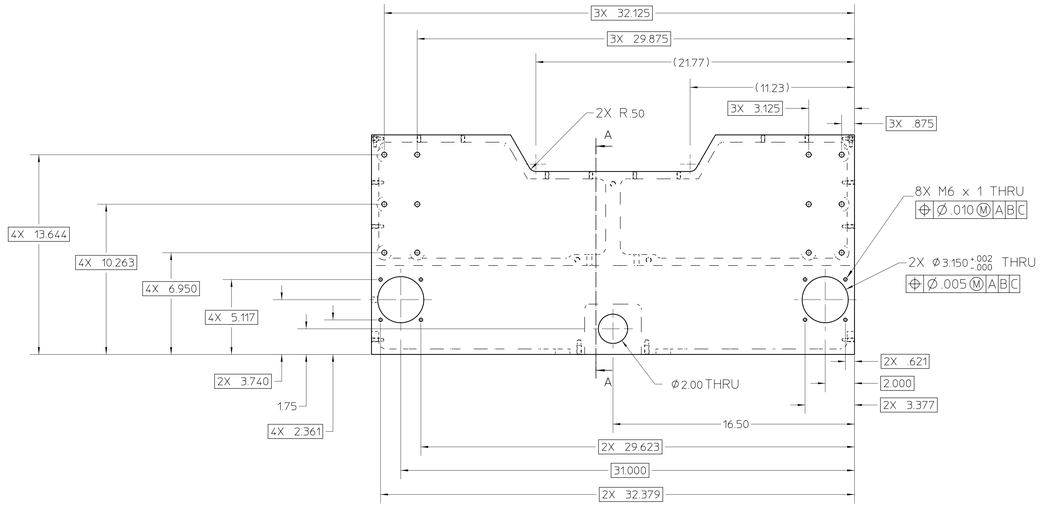

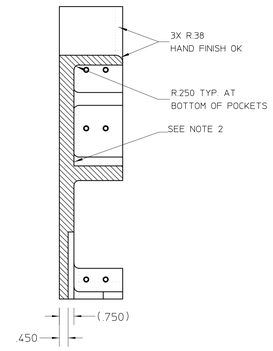

SECTION A-A
SCALE 1:3

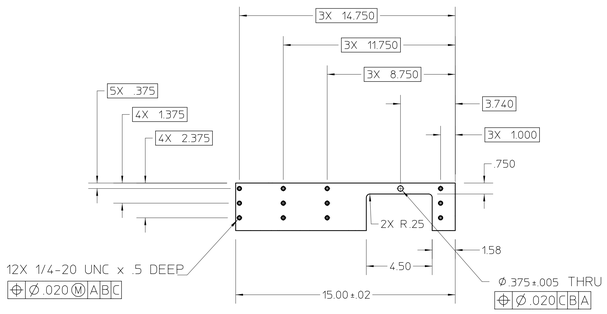

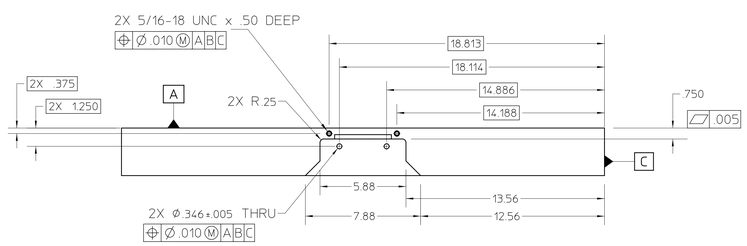

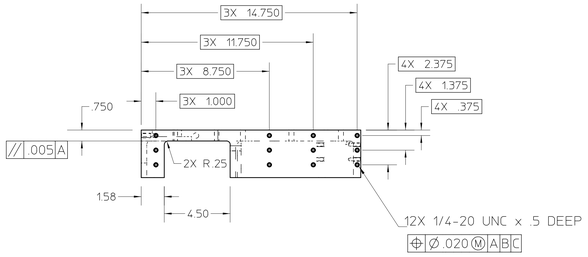

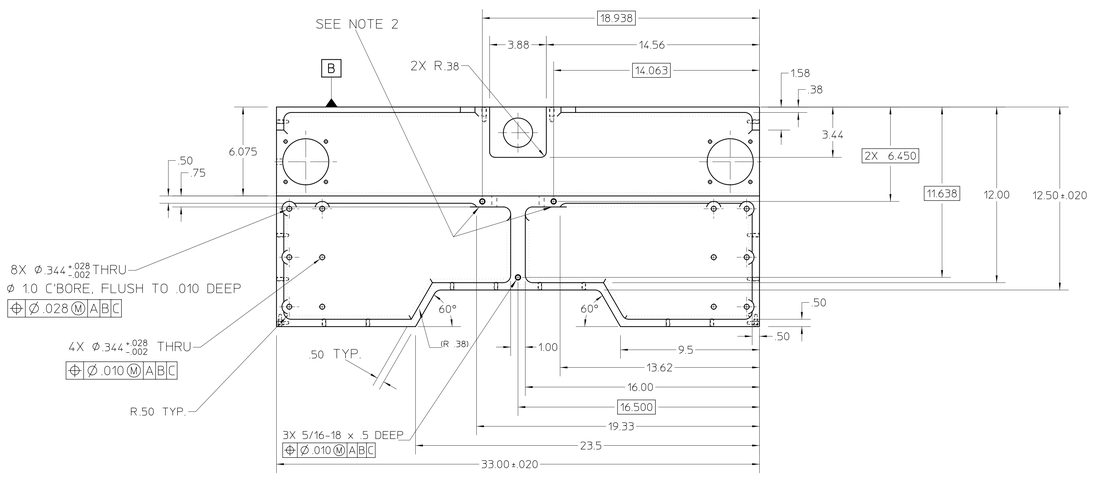

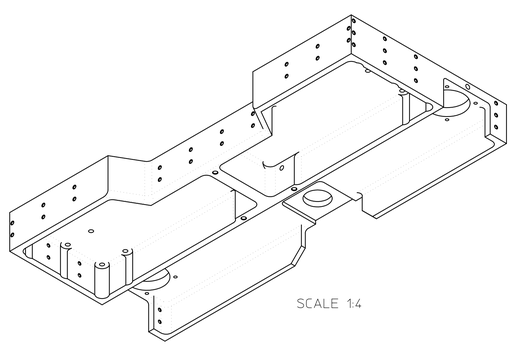

SCALE 1:4

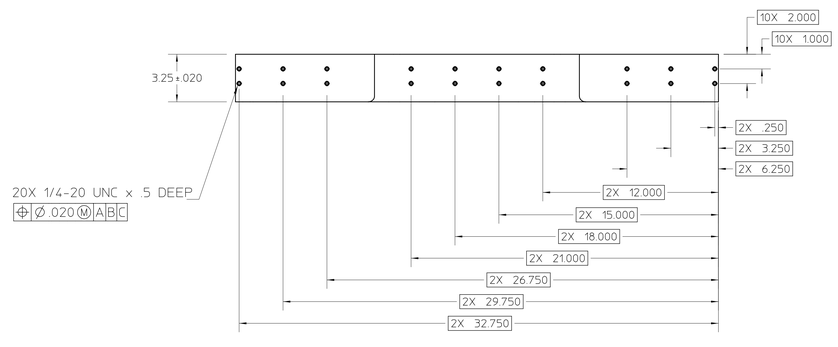

26A6026B

NOTES: (UNLESS OTHERWISE SPECIFIED)

1. SURFACE FINISH: BLACK ANODIZE
2. THIS AREA DOES NOT HAVE A .25 RADIUS AT THE BOTTOM OF THE POCKET.
3. REMOVE ALL BURRS AND BREAK ALL SHARP EDGES.
4. NOT ALL HIDDEN LINES SHOWN.
5. ALL DIMENSIONS ARE IN INCHES. REFERENCE DIMENSIONS ARE SHOWN IN PARENTHESIS.

REV	ZONE	CHANGES	DWG BY	DATE	CHK BY	DATE	APP BY	DATE
B		ADD CLEARANCE HOLE FOR WHISPERDRIVE	ajdemell	04-16-2003	N/A			

UNLESS OTHERWISE SPECIFIED
TOLERANCES: .X ± .030 FRAC. ±-; .XX ± .010 ANGLES ±1/2°; .XXX ± .005 FINISH 125√
THREADS ARE CLASS 2
CHAMFER ENDS OF ALL SCREW THREADS 30°
CUT 1.5 PITCH THRD RELIEF WITH ROUND NOSE TOOL ON MACHINE CUT THREADS.
BREAK EDGES .016 MAX. ON MACHINED WORK
REMOVE BURRS WELD SPLATTER & LOOSE SCALE
REFERENCES: ANSI Y14.5 & B46.1.

SHOP ORDERS
ACCT. NO. | SERIAL NO
DATE ISSD | DATE REQD | NO REQD
DELIVER TO | IDENT METH | SEE NOTES
SURFACE TREATMENT
DWG BY: ajdemell DATE 03-31-2003
CHK BY: kelez DATE 04-10-2003
APP BY: kelez DATE 04-10-2003

MAT 2: . NOTES:
MAT 1: . NOTES:

LAWRENCE BERKELEY LABORATORY
UNIVERSITY OF CALIFORNIA-BERKELEY
LIGHT SOURCE - BEND MAGNET BEAMLINES
BL 12.3.1 END STATION
GANTRY ASSY - BOTTOM PLATE

PATENT CLEAR | DWG. TYPE DETAIL | SHOWN ON | SCALE 1:4 | DO NOT SCALE PRINTS
MICROFILMED | DESIGN ACCT. NO. – | CATEGORY CODE AL6193 | DWG. NO. 26A6026 | SIZE | REV. B
SHEET 1 OF 1

AUTO GENERATED PDF – Apr 30 2003 15:51:49 PDT