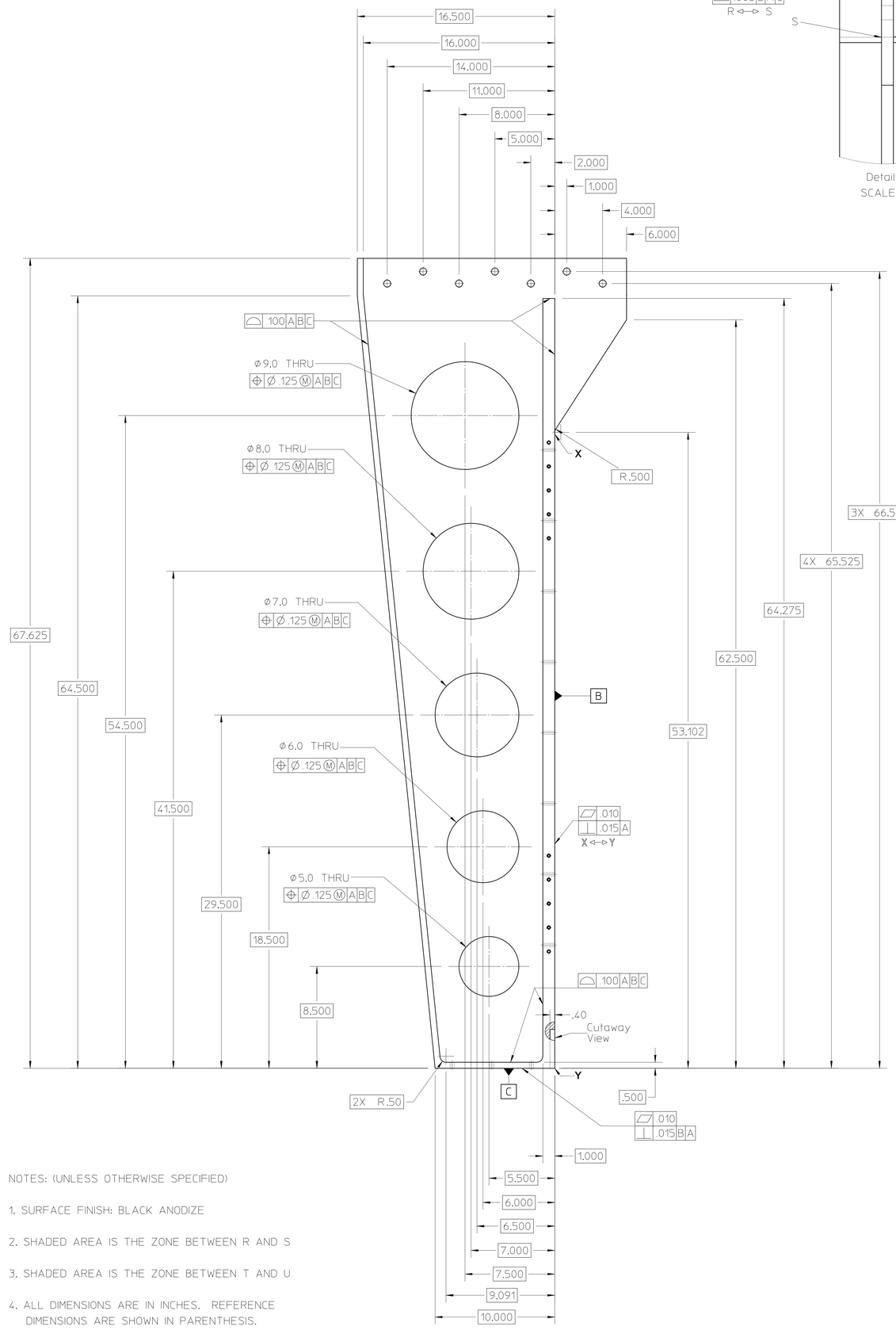

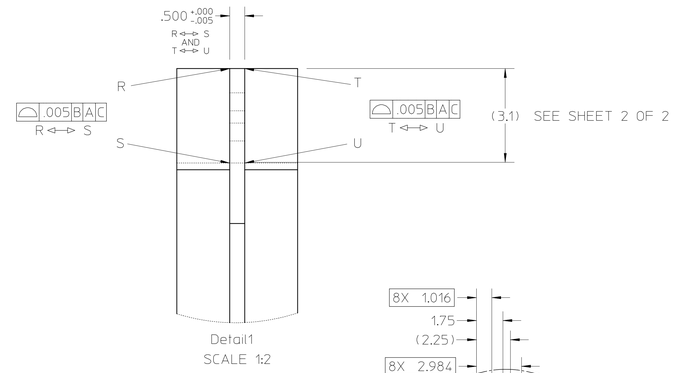

Detail1
SCALE 1:2

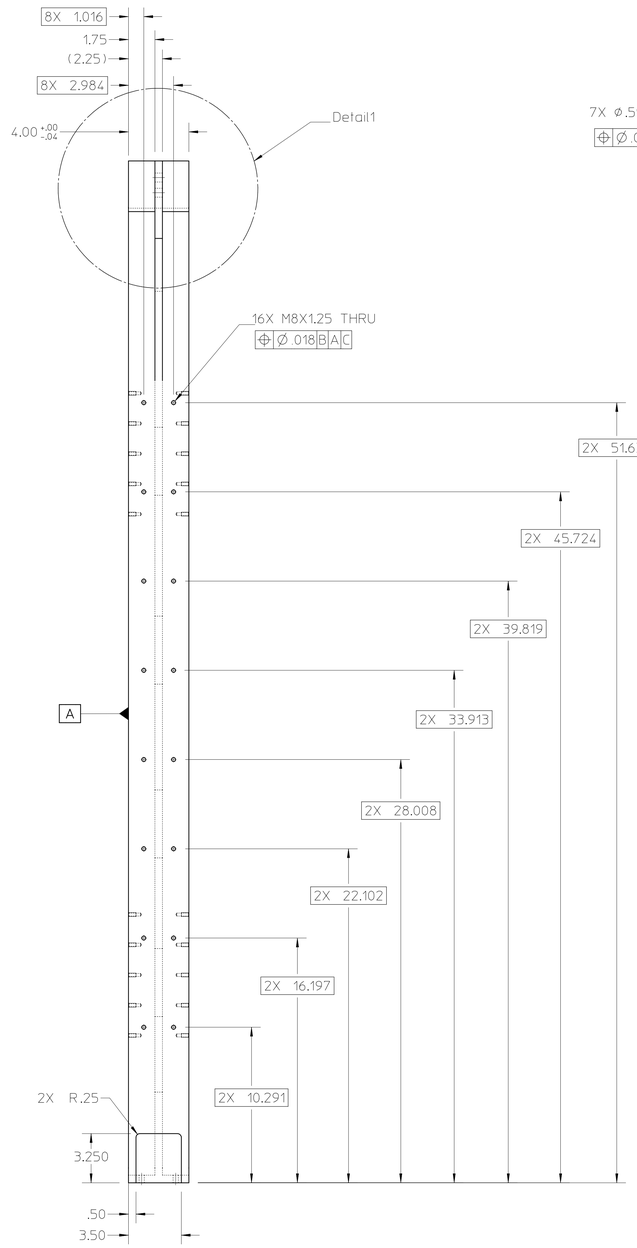

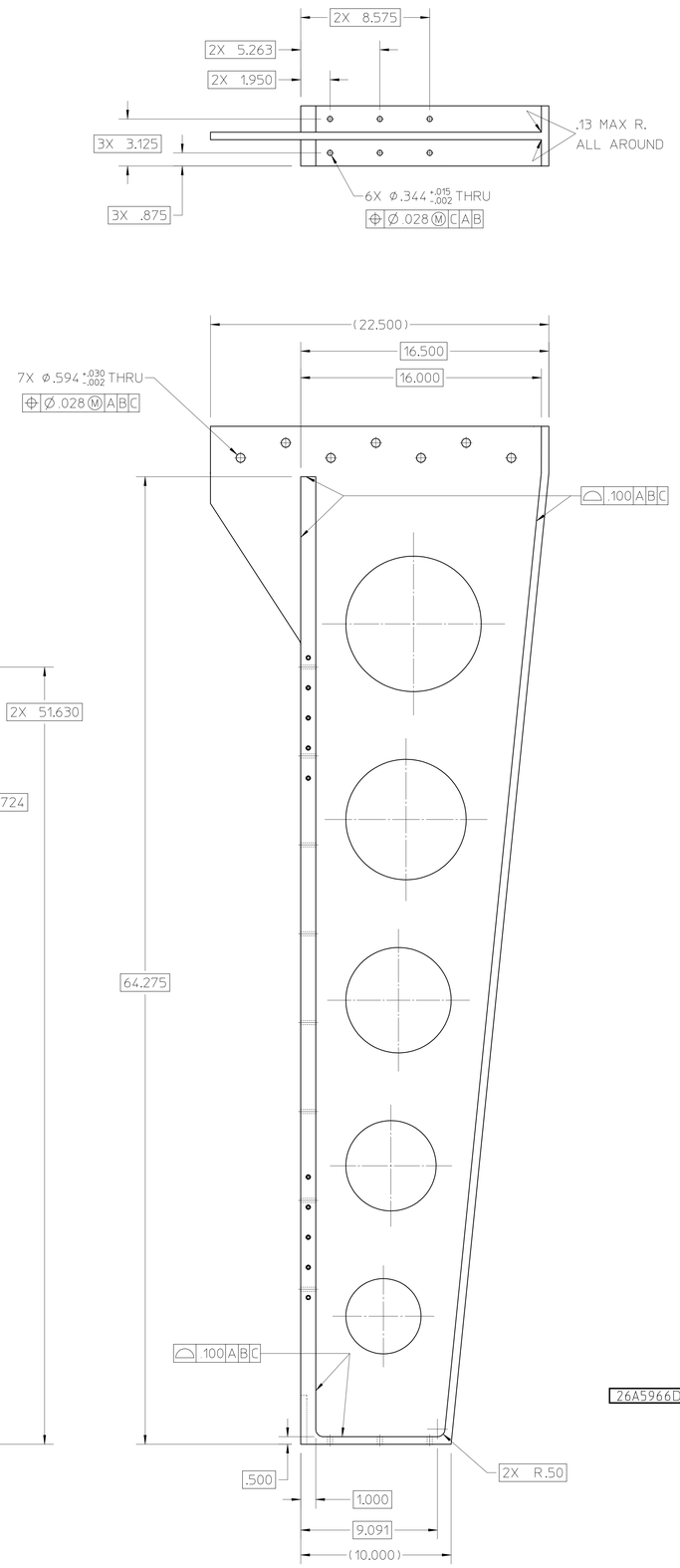

26A5966D

NOTES: (UNLESS OTHERWISE SPECIFIED)

1. SURFACE FINISH: BLACK ANODIZE
2. SHADED AREA IS THE ZONE BETWEEN R AND S
3. SHADED AREA IS THE ZONE BETWEEN T AND U
4. ALL DIMENSIONS ARE IN INCHES. REFERENCE DIMENSIONS ARE SHOWN IN PARENTHESIS.
5. NOT ALL HIDDEN LINES SHOWN.

REV	ZONE	CHANGES	DWG BY	DATE	CHK BY	DATE	APP BY	DATE
D	A4	REPLACE ERRONEOUS DIMENSIONS	ajdemell	06-04-2003				
C	D4	CHANGE 4.00 WIDTH TOL. TO +.00 AND -.04	ajdemell	05-06-2003	N/A			
B		LENGTHEN GANTRY FRAME	ajdemell	04-16-2003	N/A			

MAT 2: . NOTES:
MAT 1: PLATE, ALUMINUM 6061 T-6 NOTES:

UNLESS OTHERWISE SPECIFIED
TOLERANCES: .X ± .1 FRAC. ± - ; .XX ± .02 ANGLES ±1/2° ; .XXX ± .010 FINISH 125
THREADS ARE CLASS 2
CHAMFER ENDS OF ALL SCREW THREADS 30° (CUT 1.5 PITCH THRD RELIEF WITH ROUND NOSE TOOL ON MACHINE CUT THREADS.
BREAK EDGES .016 MAX. ON MACHINED WORK
REMOVE BURRS WELD SPLATTER & LOOSE SCALE
REFERENCES: ANSI Y14.5 & B46.1.

SHOP ORDERS
ACCT. NO. | SERIAL NO.
DATE ISSD. | DATE REQD. | NO. REQD.
DELIVER TO | IDENT METH. SEE NOTES
SURFACE TREATMENT SEE NOTES
DWG BY ajdemell DATE 03-28-2003
CHK BY kelez DATE 04-10-2003
APP BY kelez DATE 04-10-2003

LAWRENCE BERKELEY LABORATORY
UNIVERSITY OF CALIFORNIA-BERKELEY
LIGHT SOURCE - BEND MAGNET BEAMLINES
BL 12.3.1 END STATION
GANTRY ASSY - GANTRY SIDE FRAME

PATENT CLEAR	DWG. TYPE	SHOWN ON	SCALE 1:4	DO NOT SCALE PRINTS
	DETAIL			
MICROFILMED	DESIGN ACCT. NO.	CATEGORY CODE	DWG. NO. 26A5966	SIZE D	REV.
	–	AL6193		

SHEET 1 OF 2

AUXILIARY VIEWS

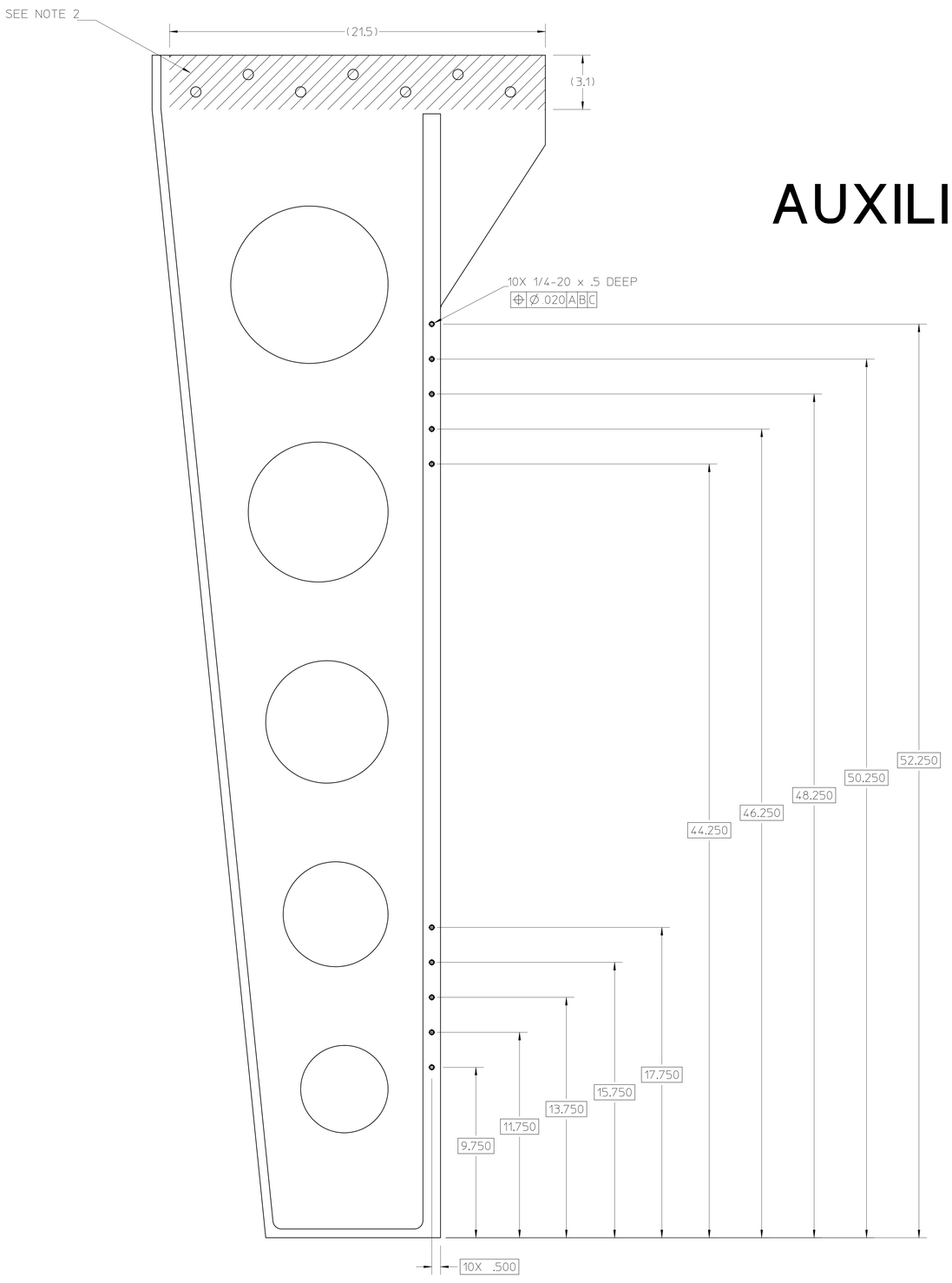

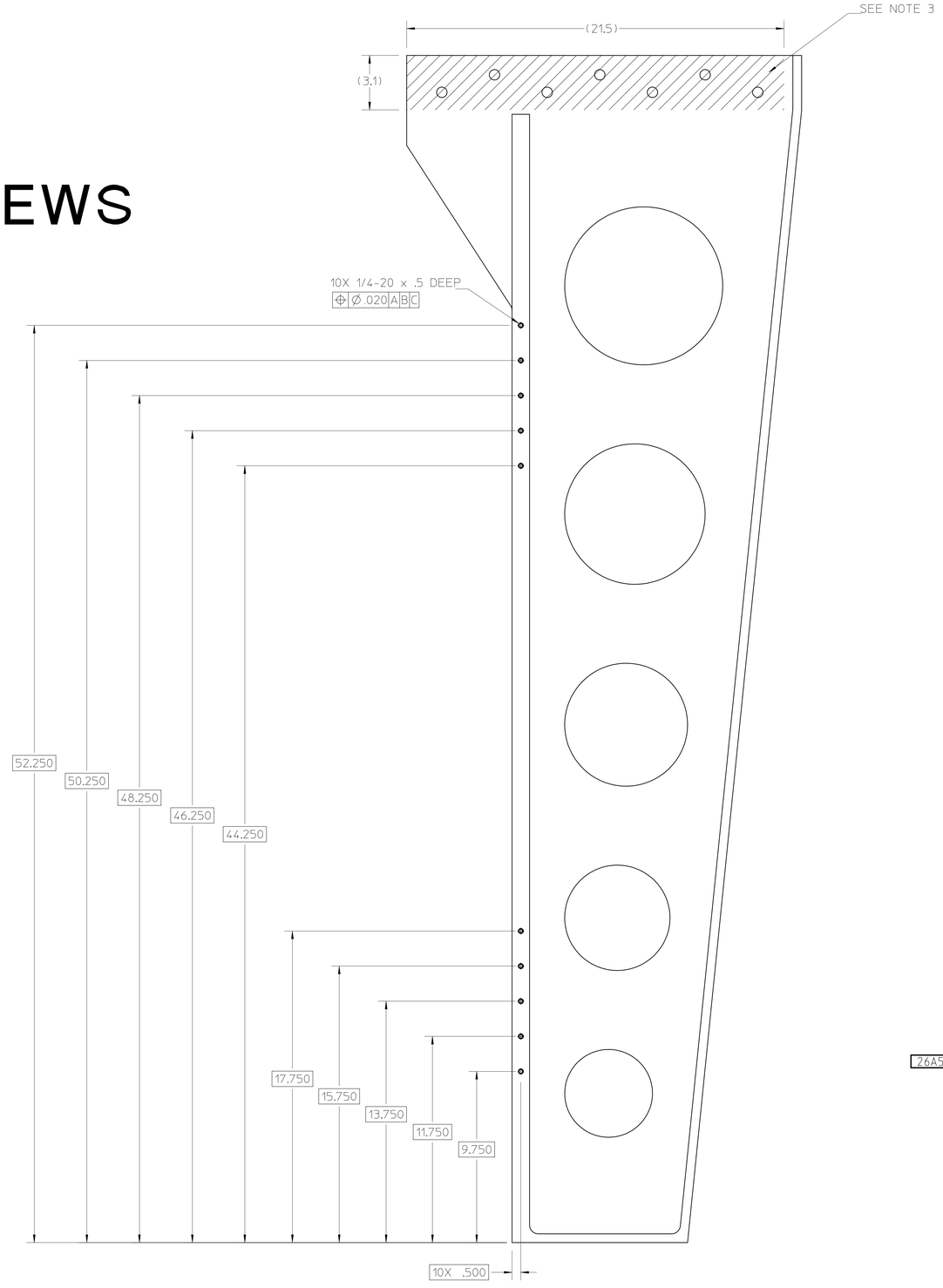

26A5966D

MAT 2: . NOTES:

MAT 1: PLATE. NOTES:

REV	ZONE	CHANGES	DWG BY	DATE	CHK BY	DATE	APP BY	DATE
D		REPLACE ERRONEOUS DIMENSIONS	ajdemell	06-04-2003				
C		CHANGE 4.00 WIDTH TOL. TO +.00 AND -.04	ajdemell	05-06-2003	N/A			
B		LENGTHEN GANTRY FRAME	ajdemell	04-16-2003	N/A			

UNLESS OTHERWISE SPECIFIED
TOLERANCES: .X ± .1 FRAC. ± - ; .XX ± .02 ANGLES ±1/2° ; .XXX ± .010 FINISH 125
THREADS ARE CLASS 2
CHAMFER ENDS OF ALL SCREW THREADS 30° CUT 1.5 PITCH TWO RELIEF WITH ROUND NOSE TOOL ON MACHINE CUT THREADS.
BREAK EDGES .016 MAX. ON MACHINED WORK.
REMOVE BURRS WELD SPLATTER & LOOSE SCALE
REFERENCES: ANSI Y14.5 & B46.1

SHOP ORDERS
ACCT. NO. | SERIAL NO.
DATE ISSD. | DATE REQD. | NO. REQD.
DELIVER TO | IDENT. METH. SEE NOTES
SURFACE TREATMENT SEE NOTES
DWG BY ajdemell DATE 03-28-2003
CHK BY kelez DATE 04-10-2003
APP BY kelez DATE 04-10-2003

LAWRENCE BERKELEY LABORATORY
UNIVERSITY OF CALIFORNIA-BERKELEY
LIGHT SOURCE - BEND MAGNET BEAMLINES
BL 12.3.1 END STATION
GANTRY ASSY - GANTRY SIDE FRAME

PATENT CLEAR | DWG. TYPE DETAIL | SHOWN ON | SCALE 1:3 | DO NOT SCALE PRINTS
MICROFILMED | DESIGN ACCT. NO. - | CATEGORY CODE AL6193 | DWG. NO. 26A5966 | SIZE D | REV.

SHEET 2 OF 2