DETECTOR SUPPORT ASSEMBLY (26A514) INSTALLATION TARGET POINTS				
DIMENSIONS ARE IN METERS	PT	R	S	T
BL 12.3.1 COORDINATE SYSTEM (SEE DRAWING NUMBER 26L7146A)	PT 1	-0.55880	1.08754	30.08013
	PT 2	0.55880	1.08754	30.08013
	PT 3	0.55880	1.08754	32.56013
	PT 4	-0.55880	1.08754	32.56013

ABSOLUTE RST NOT AS IMPORTANT AS RELATIVE ROLL AND YAW.

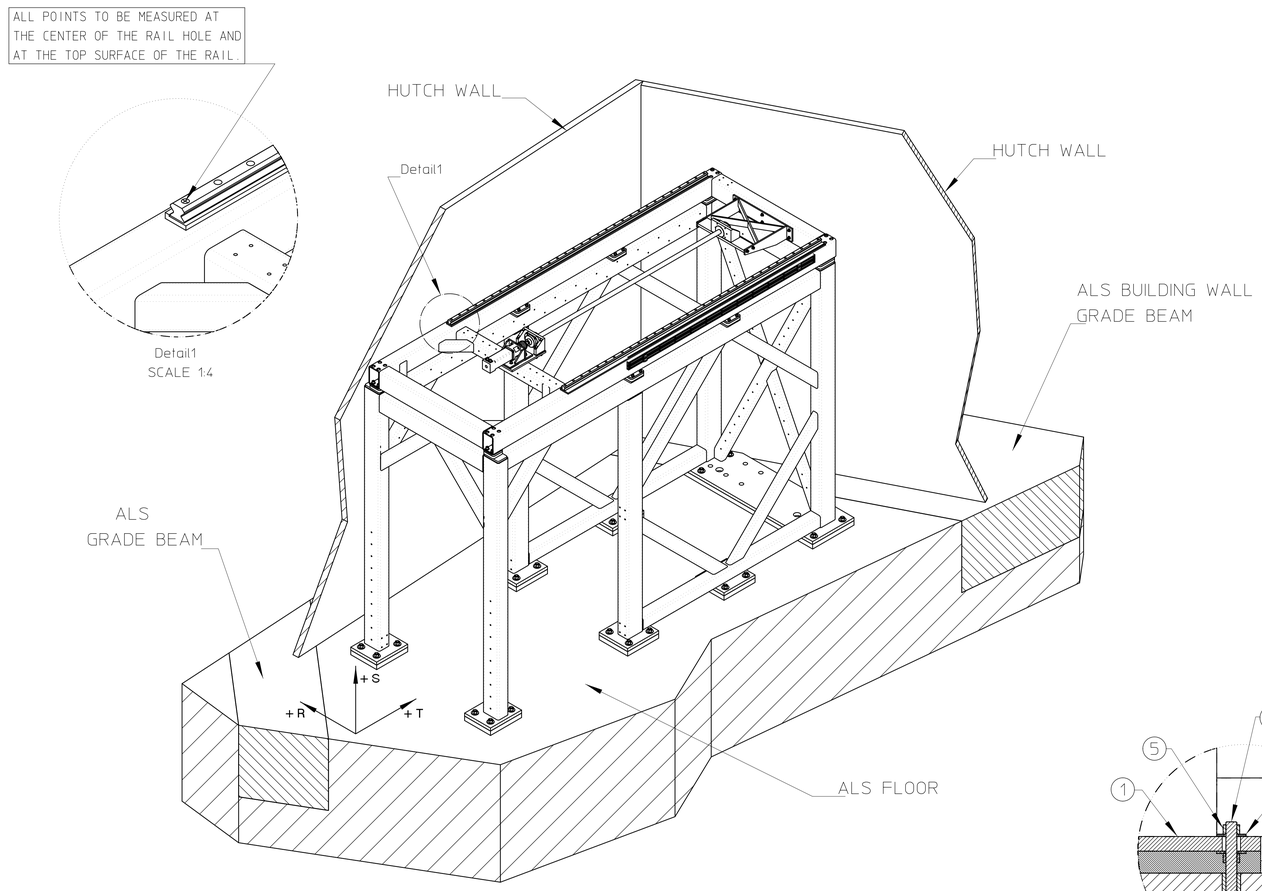

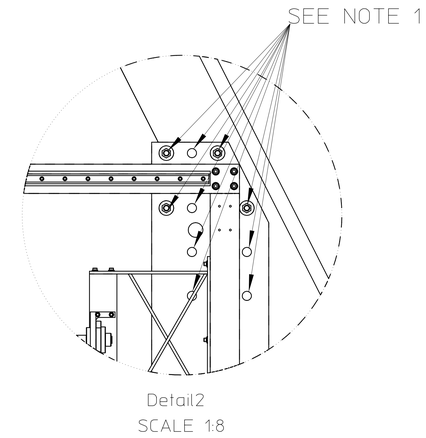

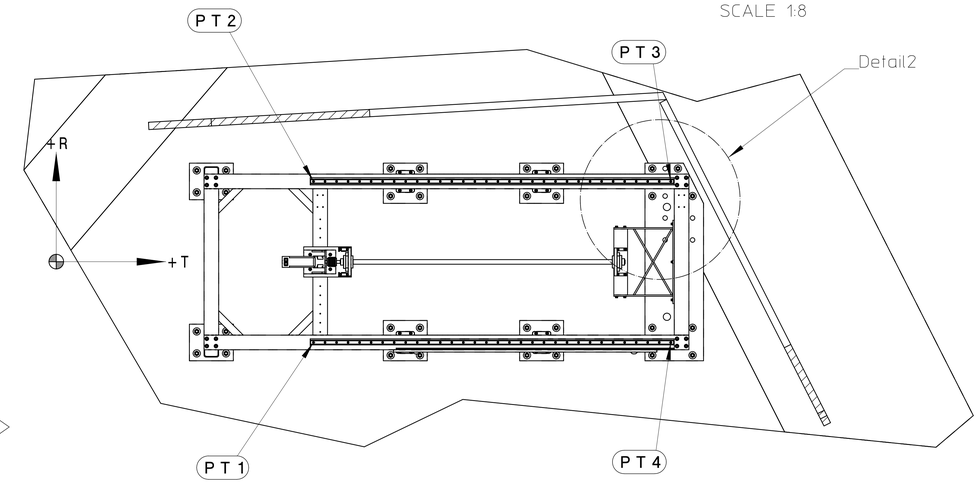

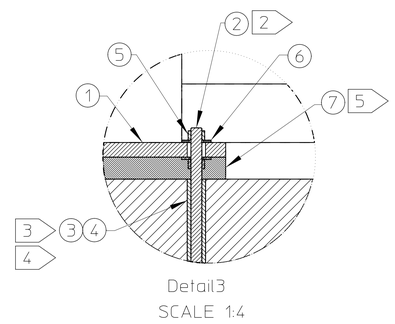

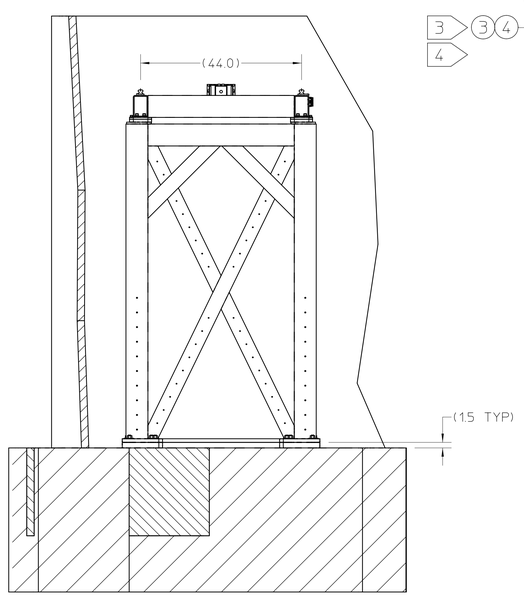

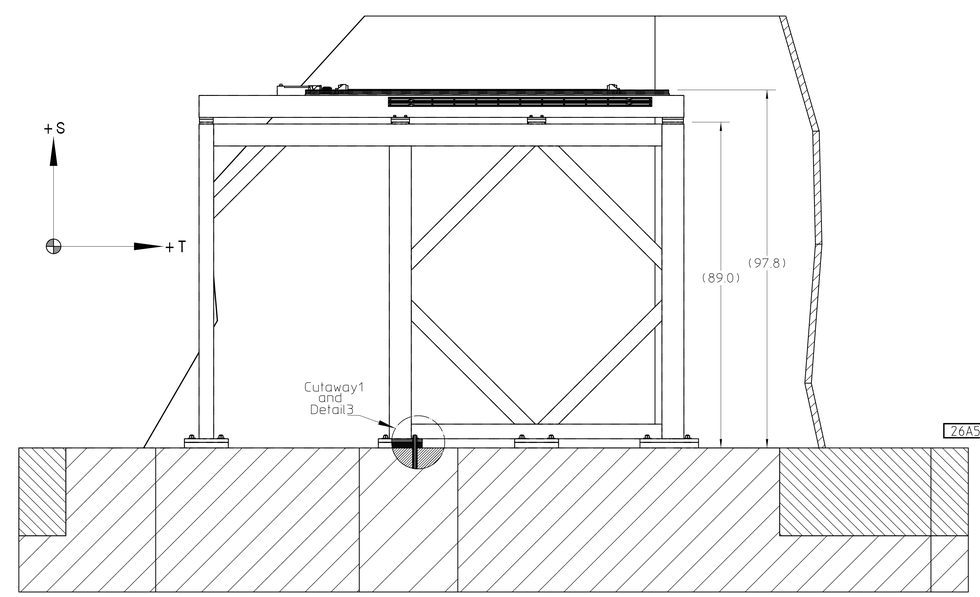

NOTE:

1. THE PLACEMENT OF THE FOUR 3/4-10 ANCHORS AS SHOWN IN DETAIL VIEW 2 MAY NOT BE THE APPROPRIATE LOCATIONS. THE LOCATION OF ANCHORS IN THIS AREA (BECAUSE OF THE BUILDING WALL GRADE BEAM) ARE TO BE DETERMINED BY INSPECTION OF THE FLOOR FOR RE-BAR. DRILLING FOR THE ANCHORS SHALL NOT DRILL INTO, NICK OR TOUCH IN ANY WAY THE RE-BAR. INSTALL THE FOUR 3/4-10 ANCHORS USING THE HOLE LOCATIONS (OF THESE TEN HOLES) THAT WILL INSURE THE ANCHOR MISSES THE RE-BAR.

2. SEE "HILTI","HVA" 3/4" ANCHOR SPECIFICATION SHEETS FOR INSTALLATION INSTRUCTIONS.

3. SEE "HILTI","HIS" 3/4" ANCHOR SPECIFICATION SHEETS FOR INSTALLATION INSTRUCTIONS.

4. SEE "HILTI","HVA" ADHESIVE SYSTEM FOR "HVU" CAPSULE SPECIFICATION SHEET FOR INSTALLATION INSTRUCTIONS.

5. SEE "UNISORB V-100 DEEP POUR FORMULA EPOXY GROUT" SPECIFICATION SHEET FOR APPLICATION INSTRUCTION.

6. DIMENSIONS AND REFERENCE DIMENSIONS, UNLESS OTHERWISE SPECIFIED, ARE SHOWN IN INCHES. REFERENCE DIMENSIONS ARE SHOWN IN PARENTHESES.

ITEM	REQD	PART NO.	DESCRIPTION
7	AS REQD	–	GROUT - BURKE DAP PACK
6	64	–	WASHER, FLAT, 3/4-10 UNC NOM 2.0" O.D., STEEL
5	64	–	NUT, HEX, 3/4-10 UNC, STEEL
4	32	–	ADHESIVE CAPSULE, HVU, 1" X 8.25" LONG, "HILTI"
3	32	–	INSERT, HIS, 3/4-10 UNC x 8.25" LONG, STEEL, "HILTI"
2	32	–	HAS ANCHOR ROD, 3/4-10 UNC x 12.00" LONG, "HILTI"
1	1	26A514	DETECTOR SUPPORT ASSEMBLY

REV	ZONE	CHANGES	DWG BY	DATE	CHK BY	DATE	APP BY	DATE

UNLESS OTHERWISE SPECIFIED
TOLERANCES: .X ± – FRAC. ± – ; .XX ± – ANGLES ± ° ; .XXX ± – FINISH 125√
THREADS ARE CLASS 2
CHAMFER ENDS OF ALL SCREW THREADS 30°
CUT 1.5 PITCH THRD RELIEF WITH ROUND NOSE TOOL ON MACHINE CUT THREADS.
BREAK EDGES .016 MAX. ON MACHINED WORK.
REMOVE BURRS WELD SPLATTER & LOOSE SCALE
REFERENCES: ANSI Y14.5 & B46.1

SHOP ORDERS
ACCT. NO. | SERIAL NO.
DATE ISSD. | DATE REQD. | NO. REQD.
DELIVER TO | IDENT. METH. | SEE NOTES
SURFACE TREATMENT
DWG BY: ajdemell DATE 07-24-2003
CHK BY: ajdemell DATE 03-07-2003
APP BY: kelez DATE 03-07-2003

LAWRENCE BERKELEY LABORATORY
UNIVERSITY OF CALIFORNIA-BERKELEY
LIGHT SOURCE - BEND MAGNET BEAMLINES
BL 12.3.1 END STATION
DETECTOR SUPPORT INSTALLATION

PATENT CLEAR | DWG. TYPE INSTALL | SHOWN ON | SCALE 1:16 | DO NOT SCALE PRINTS
MICROFILMED | DESIGN ACCT. NO. – | CATEGORY CODE AL6193 | DWG. NO. 26A5396 | SIZE | REV. A
SHEET 1 OF 1

AUTO GENERATED PDF – Mar 07 2003 16:01:50 PST