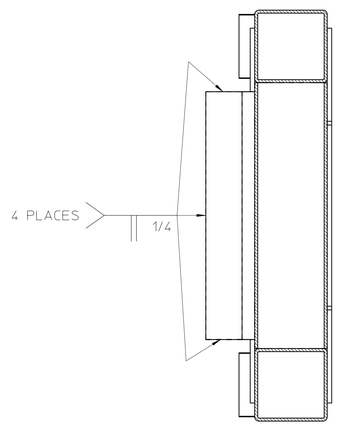

SECTION B-B

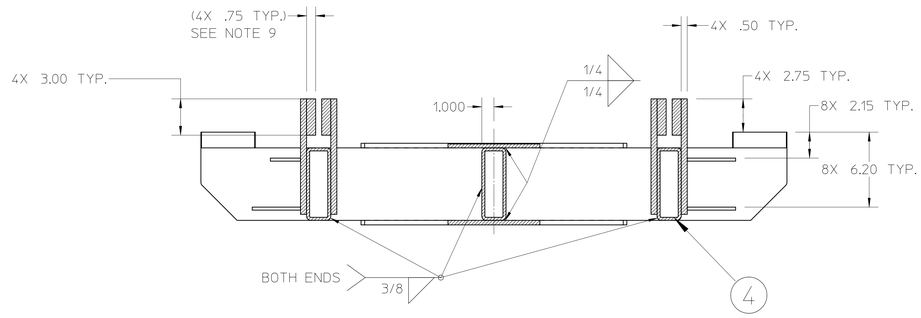

SECTION A-A

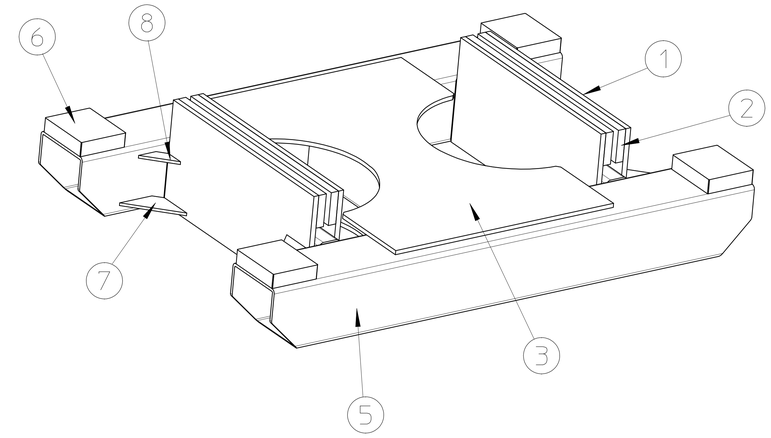

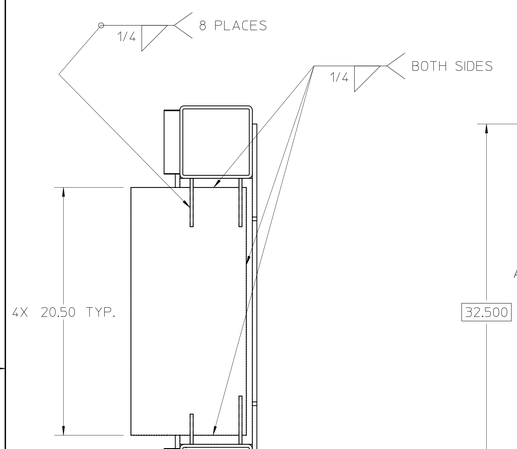

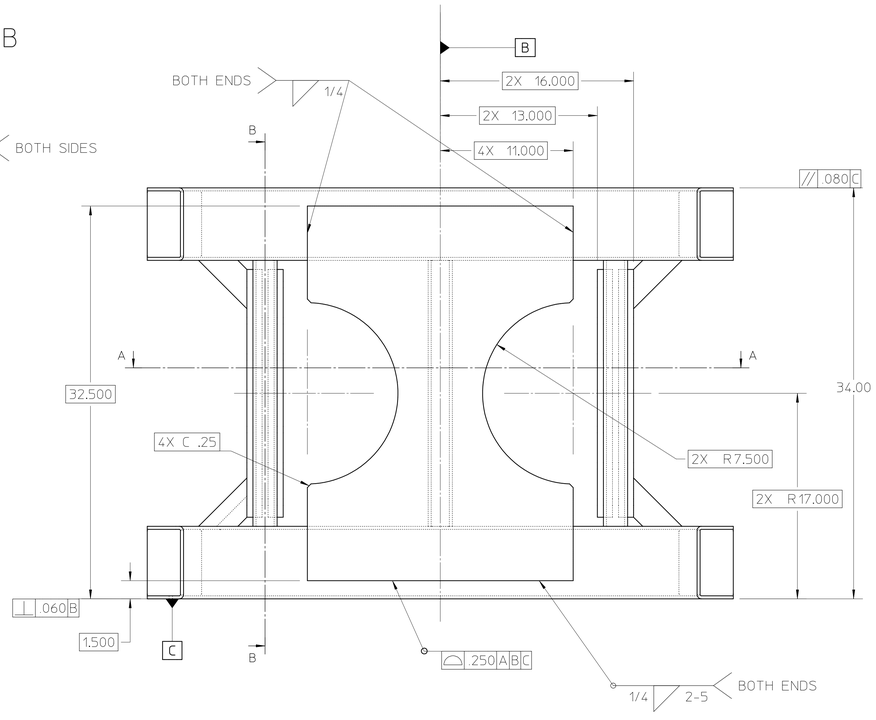

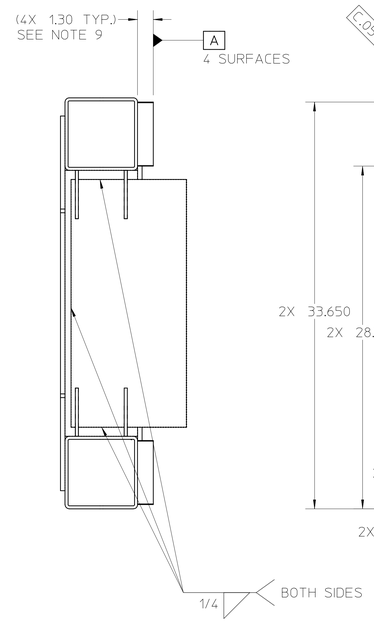

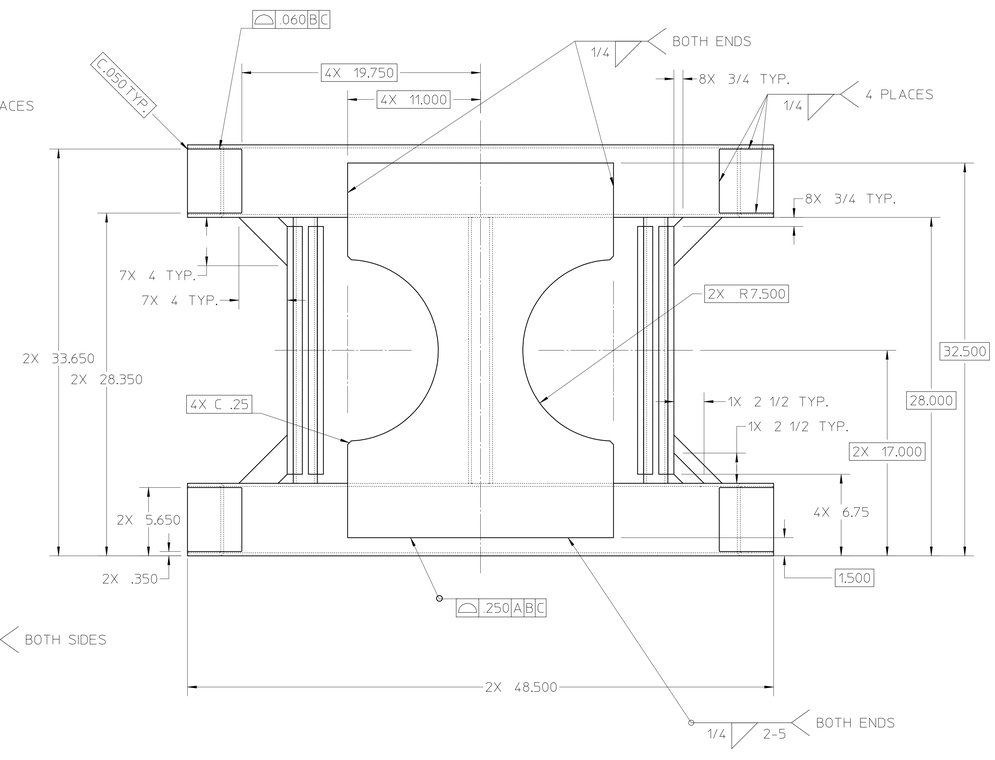

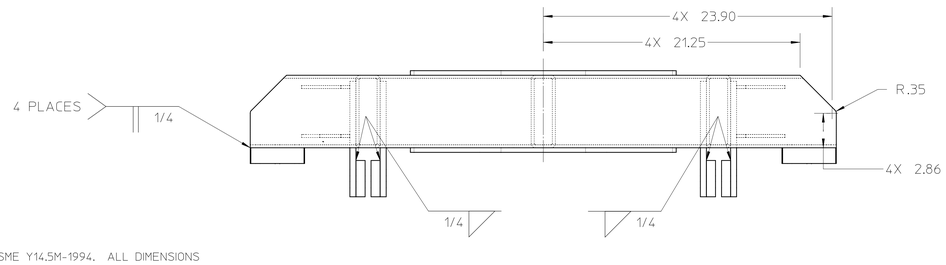

26A4876D

NOTES: (UNLESS OTHERWISE SPECIFIED)

1. DIMENSIONING AND TOLERANCING PER ASME Y14.5M-1994. ALL DIMENSIONS ARE IN INCHES. REFERENCE DIMENSIONS ARE SHOWN IN PARENTHESIS.
2. ALL WELD SYMBOLS PER ANSI/AWS A2.4-1993.
3. SAW CUT PERMISSIBLE FOR ITEMS 4 AND 5.
4. EDGES MAY BE FLAME OR WATER JET CUT AND HAND SANDED ON ITEM 3.
5. REMOVE ALL BURRS AND BREAK ALL SHARP EDGES .03-.06" CHAMFER OR RADIUS.
6. REMOVE ALL SPLATTER, SLAG ETC. FROM WELD AREAS.
7. STRESS RELIEVE ENTIRE STRUCTURE AFTER WELDING.
8. NOT ALL HIDDEN LINES SHOWN.
9. THE MATERIAL THICKNESSES AND LENGTHS SPECIFIED WITH THESE DIMENSIONS ARE FINISHED SIZES AND DO NOT INCLUDE ANY CUTTING ALLOWANCES FOR FINAL MACHINING. SEE DRAWING #26A487 PAGE 2 OF 2 FOR MACHINING DETAILS.
10. MASK OR PLUG ALL THREADED HOLES PRIOR TO SANDBLASTING AND PAINTING.
11. DO NOT PAINT SURFACES IDENTIFIED IN VIEWS.
12. IF FABRICATION DONE OUTSIDE LBL: FINISH PER LBL PAINT SPECIFICATION #M767.
13. IF FARICATION DONE AT LBL:
    a. DEGREASE AND SANDBLAST.
    b. APPLY 'TIGER DRYLAC SERIES 09' PER MANUFACTURERS' INSTRUCTIONS.
    c. COLOR IS 09-90140 SUNGOLD.
    d. ALTERNATE PAINT SPECIFICATION: LBL ENG. SPEC. #M767.

REQD	ITEM	PART NO.	DESCRIPTION
1	8	-	PLATE, MILD CARBON STEEL, 2-1/2" x 2-1/2" x 1/4" THICK
7	7	-	PLATE, MILD CARBON STEEL, 4" x 4" x 1/4" THICK
4	6	-	PLATE, STEEL, 5.3" x 7" x 1.3"
2	5	-	SQUARE TUBE HSLA-70 STEEL, 6" x 6" x .25" WALL
3	4	-	RECTANGULAR TUBE, A500 Gr B STEEL, 6" x 2" x .25" WALL
2	3	-	PLATE, MILD CARBON STEEL, .375" THICK
4	2	-	BAR, STEEL
4	1	-	PLATE, STEEL, 20.50" x 8.05" x .50"

REV	ZONE	CHANGES	DWG BY	DATE	CHK BY	DATE	APP BY	DATE
D		CHANGE COLOR FROM BLACK TO SUNGOLD	ajdemell	2003/02/05				
C		MODIFY TEXT	ajdemell	2003/02/04	N/A		kelez	2003/02/04
B		CHANGE TOLERANCE SHEET 2 OF 2 IN D5 & D6	ajdemell	2003/02/04				

UNLESS OTHERWISE SPECIFIED
TOLERANCES: .X ± .1 FRAC. ± 1/8; .XX ± .04 ANGLES ± 1°; .XXX ± .020 FINISH 125
THREADS ARE CLASS 2
CHAMFER ENDS OF ALL SCREW THREADS 30°.
CUT 1.5 PITCH THRD RELIEF WITH ROUND NOSE TOOL ON MACHINE CUT THREADS.
BREAK EDGES .016 MAX. ON MACHINED WORK.
REMOVE BURRS WELD SPLATTER & LOOSE SCALE
REFERENCES: ANSI Y14.5 & B46.1

SHOP ORDERS
ACCT. NO. | SERIAL NO.
DATE ISSD. | DATE REQD. | NO. REQD.
DELIVER TO | IDENT. METH. | SEE NOTES
SURFACE TREATMENT SEE NOTES
DWG BY ajdemell DATE 2003/01/07
CHK BY kelez DATE 2003/02/04
APP BY kelez DATE 2003/02/04

LAWRENCE BERKELEY LABORATORY
UNIVERSITY OF CALIFORNIA-BERKELEY
LIGHT SOURCE - BEND MAGNET BEAMLINES
BL 12.3.1 END STATION
CARRIAGE WELDMENT ASSEMBLY

PATENT CLEAR	DWG. TYPE	SHOWN ON	SCALE 1:5	DO NOT SCALE PRINTS
MICROFILMED	DESIGN ACCT. NO. -	CATEGORY CODE AL6193	DWG. NO. 26A4876	SIZE D / REV

SHEET 1 OF 2

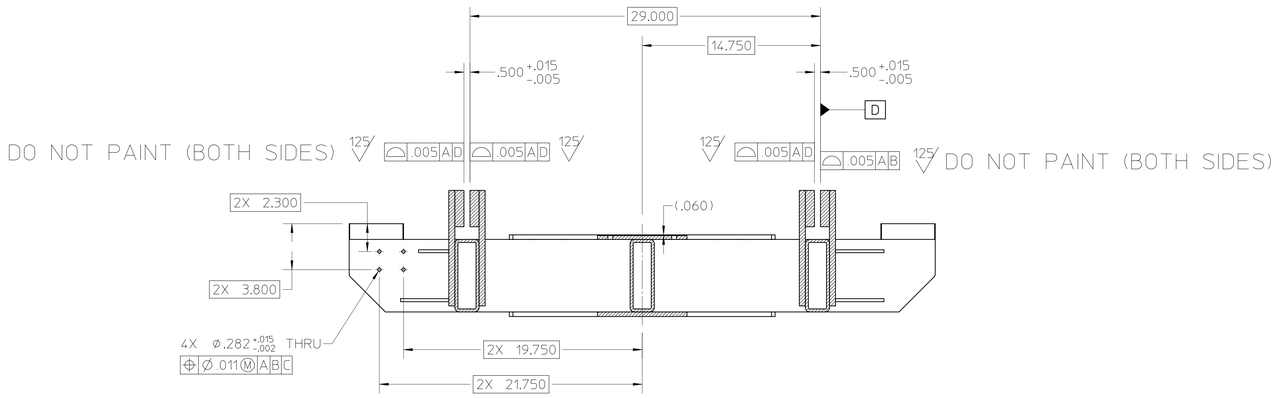

SECTION C-C

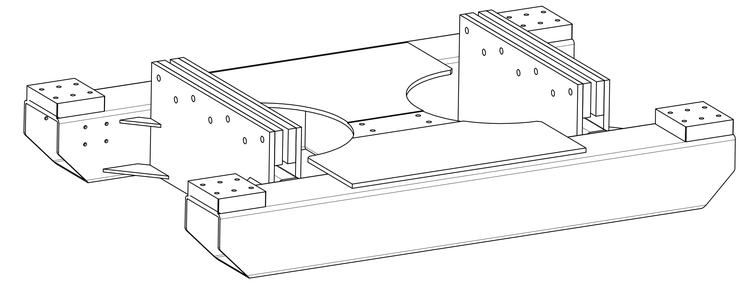

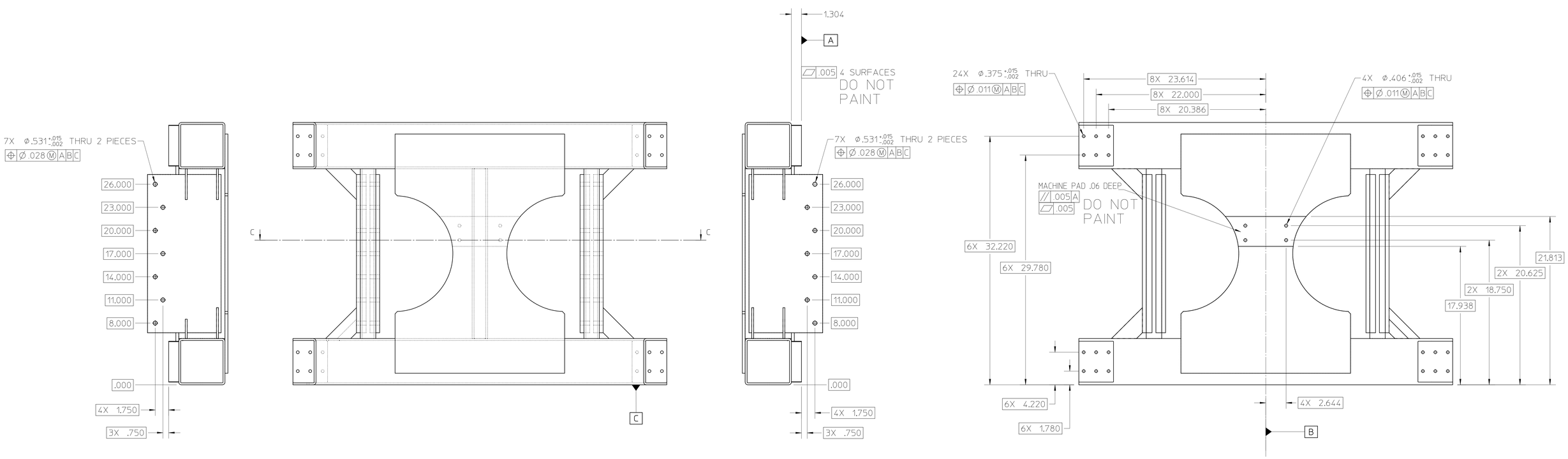

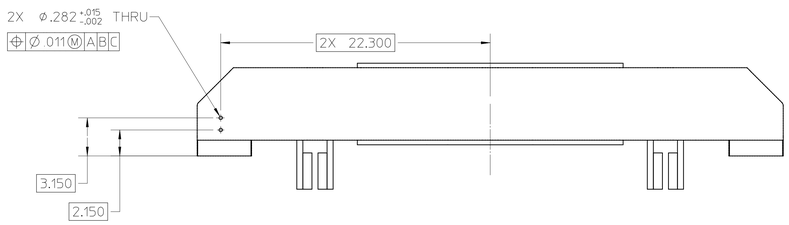

26A4876D

REV	ZONE	CHANGES	DWG BY	DATE	CHK BY	DATE	APP BY	DATE
D		CHANGE COLOR FROM BLACK TO SUNGOLD	ajdemell	2003/02/05				
C		MODIFY TEXT	ajdemell	2003/02/04	N/A		kelez	2003/02/04
B		CHANGE TOLERANCE SHEET 2 OF 2 IN D5 & D6	ajdemell	2003/02/04				

UNLESS OTHERWISE SPECIFIED
TOLERANCES: .X ± .1 FRAC. ± 1/8; .XX ± .04 ANGLES ± 1°; .XXX ± .020 FINISH 125√
THREADS ARE CLASS 2
CHAMFER ENDS OF ALL SCREW THREADS 30° OUT 1.5 PITCH THRD. RELIEF WITH ROUND NOSE TOOL ON MACHINE CUT THREADS.
BREAK EDGES .016 MAX. ON MACHINED WORK
REMOVE BURRS WELD SPLATTER & LOOSE SCALE
REFERENCES: ANSI Y14.5 & B46.1.

SHOP ORDERS
ACCT. NO. | SERIAL NO.
DATE ISSD. | DATE REQD. | NO. REQD.
DELIVER TO | IDENT. METH. | SEE NOTES
SURFACE TREATMENT SEE NOTES
DWG BY ajdemell DATE 2003/01/07
CHK BY kelez DATE 2003/02/04
APP BY kelez DATE 2003/02/04

LAWRENCE BERKELEY LABORATORY
UNIVERSITY OF CALIFORNIA-BERKELEY
LIGHT SOURCE - BEND MAGNET BEAMLINES
BL 12.3.1 END STATION
CARRIAGE WELDMENT ASSEMBLY

PATENT CLEAR	DWG. TYPE	SHOWN ON	SCALE 1:5	DO NOT SCALE PRINTS
MICROFILMED	DESIGN ACCT. NO. –	CATEGORY CODE AL6193	DWG. NO. 26A4876	SIZE D / REV

SHEET 2 OF 2